Section 3
HEAVY-DUTY VEHICLES

METHANOL

Fuel Description

Methanol is a common industrial chemical used as a solvent and in numerous manufacturing processes. It is a colorless liquid with a faint odor. Methanol has entered the fuel market indirectly as a feedstock for the production of methyl tertiary butyl ether (MTBE), the preferred oxygenate for addition to gasoline to reduce carbon monoxide emissions. Methanol is currently made from natural gas, but it also can be made from coal or renewable resources such as waste wood.

Methanol burns without a visible flame. While this is a safety concern, it also means that methanol does not produce soot, smoke, or particulates when combusted. This characteristic makes methanol attractive as a diesel engine fuel in place of conventional diesel fuel which produces particulates when combusted. (Recent health effects studies suggest that particulate matter is a health hazard regardless whether known carcinogenic hydrocarbons from diesel fuel are adsorbed onto the particulates or not.) Although methanol is poisonous, diesel fuel contains several hydrocarbons that are known or suspected carcinogens. Methanol exposure studies have shown that methanol does not cause harm in the quantities that would accumulate in the body from exposure to refueling vapors or unburned methanol in vehicle exhaust. In addition, methanol combustion can produce very low emissions of nitrogen oxides (NO_x) because of methanol's high latent heat of vaporization. This fact, combined with the fact that methanol is less reactive in the atmosphere than hydrocarbons from diesel fuel, make the emissions benefits of using methanol in diesel engines very positive. In fact, the lowest emission heavy-duty diesel engine certified by the Environmental Protection Agency to date is the Detroit Diesel Corporation 6V-92TA methanol engine.

Table 3.1 compares the properties of methanol and both No. 1 and No. 2 diesel fuel. (No. 2 diesel fuel is used by almost all over-the-road heavy-duty diesel trucks while transit buses use either No. 1 or No. 2.) Comparing methanol to diesel fuel, the most striking difference is in distillation range. Methanol, being a single constituent, has a single boiling point while diesel fuel is composed of many hydrocarbons that have a wide range of boiling points. Methanol's flash point is much lower than that of diesel fuel, which means that methanol is more easily ignited than diesel fuel at low temperatures. Methanol has a significant vapor pressure while diesel fuel does not, indicating that methanol is a more volatile fuel relative to diesel fuel. The autoignition temperature of methanol is much higher than that of diesel fuel (a safety advantage) and its energy

content is less than half that of diesel fuel, meaning that a methanol fuel tank must be nearly twice as large as a conventional diesel fuel tank to provide the same amount of energy.

Table 3.1 Properties of Methanol and Diesel Fuels

Fuel Property	Methanol [1]	No. 1 Diesel Fuel	No. 2 Diesel Fuel
Distillation Range, °F	149[2]	300 to 600	400 to 700
Weight, lb/gal	6.6	6.0 to 6.5	6.7 to 7.4
Flash Point, °F	52	100 (min)	125 (min)
Vapor Pressure, psi @ 100°F	4.6	NA[3]	NA[3]
Lower Heating Value, Btu/gal	56,800	124,000-126,000	128,000-130,000
Autoignition Temperature, °F	867	400 to 500	400 to 500
Cetane Rating	0 to 10	40 to 55	40 to 55
Flame Visibility	Invisible in Daylight	Visible under All Conditions	Visible under All Conditions
Octane Number (R+M/2)	99	NM [4]	NM [4]

[1] Straight, unblended methanol.
[2] Methanol has a single boiling temperature because it is a single constituent.
[3] Diesel fuel has virtually insignificant vapor pressure at 100°F.
[4] Not meaningful

Methanol and diesel fuel are for all practical purposes immiscible, which precludes using blends of methanol and diesel fuel in diesel vehicles.

Cetane rating is the measure of a fuel's propensity to ignite under high heat and pressure, as in a diesel engine. Methanol's cetane rating is between 0 and 10, while diesel fuel has cetane ratings in the range of 40 to 55. Diesel engines must incorporate special features to overcome the low cetane of methanol, or additives can increase the cetane rating of methanol to levels similar to diesel fuel. Each approach has its advantages and disadvantages, but the emissions benefits of methanol are the same in either case. Methanol also has less lubricity than diesel fuel, which causes problems with some fuel injection equipment. However, lubricity additives are available to mitigate this disadvantage.

Diesel engines of all types could use ignition-improved methanol with modifications to the fuel injection system to enable the proper amount of fuel to be injected. The only other modifications would be replacement of any fuel system components that may not be methanol-compatible, such as filters and elastomers, and use of an

engine oil formulated for methanol fuel. Engines and fuel systems modified to accommodate ignition-improved methanol could also run on diesel fuel if the fuel flow is restricted to prevent overfueling.

Ignition improvers are typically composed of compounds that contain nitrogen. Examples include triethyleneglycol dinitrate, octyl nitrate, cyclohexyl nitrate, 2-n-butoxyethyl nitrate, 2-methoxyethyl nitrate, and tetrahydrofurfuryl nitrate. Commercial names include DII-3®, Cetanox-175®, and Avocet®. The amount of ignition-improver needed to attain sufficient cetane number varies according to the engine model, but dosages in the range of three to seven volume percent are typical.

Using ignition-improved methanol in a diesel engine can dramatically lower the particulate emissions from that engine. Particulate emission reduction for diesel engines running on diesel fuel alone would require extensive use of emission control hardware, most likely an oxidation catalyst, a particulate trap, and/or revised engine calibration. Diesel engine manufacturers are building new diesel engines that make use of higher injection pressures and revised combustion chamber geometry to greatly reduce engine-out particulate emissions. When coupled with an oxidation catalyst, these engines are capable of meeting the most stringent current particulate emission regulations, but use of methanol as a fuel still has an advantage in terms of reduced NO_x emissions. The U.S. Environmental Protection Agency claims that heavy-duty diesel engines are major producers of NO_x and should be made to comply with more stringent NO_x standards, which could make use of methanol and other alternative fuels more attractive.[1]

Methanol is produced primarily from the steam reformation of natural gas. Methanol can also be produced from coal and municipal waste; however, there is only one plant in the U.S. that produces methanol from coal. In the U.S., the primary production location is in the Gulf coast area. Large amounts of methanol are also produced in Canada, South America, Europe, and the Middle East. Methanol production and price are not controlled by any single country, nor any consortium of countries. Any country with remote natural gas reserves is a candidate for methanol production since production of methanol usually represents the most cost-effective means of developing those reserves.

Methanol is distributed throughout the U.S. as an industrial chemical. Most suppliers can be found in the phone book under chemical or industrial supplies. The price of methanol in small quantities is much higher than if delivery in large bulk quantities (such as petroleum fuels are delivered) can be arranged.

---

[1] "Tighter Controls Evaluated for NO_x, HC and PM Emissions From Heavy-Duty Engines," U.S. Environmental Protection Agency Environmental Fact Sheet, EPA420-F-95-008, June 1995.

Vehicle Technology

When methanol is used in heavy-duty vehicles, it is replacing diesel fuel, which is a much less volatile fuel with higher energy density. Whether straight or ignition-improved methanol is used, the modifications to the vehicle are similar. The following describes the modifications made to a transit bus to use methanol containing the ignition-improver Avocet®. These modifications were performed as part of the AFV-FDP and are typical of those that would be made for any heavy-duty vehicle to use methanol.

The modified bus was a 1979 GMC RTS-II coach transit bus with a Detroit Diesel Corporation (DDC) 8V-71 engine. The bus is owned by Yankee Trails, a commuter and tour bus company in Albany. As depicted in Figure 3.1, several modifications to the original 8V-71 engine configuration were necessary to operate on the methanol/Avocet® fuel mixture. These modifications resulted from three main fuel property characteristics of methanol/Avocet® fuel mixtures compared to conventional diesel fuel: (1) lower fuel energy content on a unit volume basis; (2) increased corrosiveness towards typical fuel system component materials; and (3) higher fuel vapor pressures.

The 92.5%/7.5% methanol/Avocet® fuel mixture used in this demonstration had less than half the energy content of conventional diesel fuel on a unit volume basis. For an equivalent volume of methanol/Avocet® and diesel fuel, assuming engine efficiency using both fuels is similar, the lower energy content of methanol/Avocet® fuel would result in just less than half the driving range compared with diesel fuel operation. Therefore, in order to maintain an acceptable driving range for the GMC RTS-II transit bus on methanol/Avocet® operation, the existing carbon steel 85-gallon diesel fuel storage tank was replaced with a carbon steel, 120-gallon methanol/Avocet® storage tank (though methanol is corrosive to metals such as aluminum, it does not attack steel unless water is present).

Another inherent disadvantage of the lower energy content of methanol/Avocet® use in compression ignition engines is loss in engine power, unless the injection quantity is adjusted correspondingly. For this reason, a high-flow-capacity fuel system was added to the 8V-71 engine for methanol/Avocet® fuel operation. The methanol/Avocet® fuel system included a high flow capacity gear-type fuel pump (3/8-in. wide gears) to replace the existing diesel fuel gear-type pump (1/4 in.-wide gears).

Subsequent to this vehicle conversion, DDC developed guidelines for vehicle fuel system modifications when using one of their methanol engines, recommending use of an electric fuel pump instead of an enlarged mechanical fuel pump. Because the high flow rate of the electric fuel pump caused fuel recirculation back to the fuel tank to increase significantly, the methanol in the tank tended to get hot enough to require the addition of a fuel cooler to prevent vapor lock.

To increase methanol/Avocet® fuel flow through the fuel injectors, fuel injectors built from off-the-shelf components (maximum 185 cc per 1000 strokes) were used in place of the original diesel fuel injectors (maximum 55 cc per 1000 strokes). One last fuel system modification was to enlarge the fuel pressure orifice in the fuel rail to accommodate higher fuel return rates to the fuel storage tank. The enlarged orifice was required to prevent excessive fuel pressures with the high-capacity fuel pump.

The highly polar nature of methanol makes it aggressive to both metals (particularly aluminum and magnesium) and non-metals, and required changes in the 8V-71 engine fuel system component materials. Methanol has adverse effects on many elastomers used in typical diesel fuel systems. It tends to soften, swell, or decompose these materials, resulting in eventual fuel leaks or system malfunction. To prevent such material degradation from the methanol contained in the methanol/Avocet® fuel mixtures, several components of the fuel system were changed to methanol-compatible materials. The methanol-compatible components that were substituted in the fuel system included Teflon®-lined fuel lines, o-ring seals within the fuel injectors, fuel pump shaft seals, and fuel filter elements.

The metals in the original fuel system were exclusively steel or cast iron, neither of which is attacked by methanol. For this reason, no changes were necessary to the metallic fuel system components of the fuel system.

One additional modification was made to the 8V-71 engine fuel system. Because of the higher vapor pressure of the methanol/Avocet® fuel mixture compared with diesel fuel, larger amounts of fuel vapor are generated within the fuel tank and fuel lines after engine shutdown. The gear-type fuel pumps used in the 8V-71 do not efficiently pump liquid-vapor fuel mixtures. Instead, these pumps are designed solely for liquid fuel flow applications, such as typically experienced with diesel fuel applications. To overcome these fuel pumping problems at engine start-up with methanol/Avocet®, an in-line electric priming pump was incorporated into the fuel line between the fuel tank and gear-type fuel pump. The in-line priming pump served to supply the gear-type fuel pump with a consistent supply of liquid methanol/Avocet® fuel, thereby ensuring efficient operation of the gear-type fuel pump under all engine starting conditions. The priming pump was activated only before starting the engine and was not needed after engine start. (A priming pump is not required under the DDC guidelines because the electric fuel pump makes it unnecessary.) As an added safety precaution, a dry chemical fire suppression system was incorporated into

Figure 3.1 Modifications for Methanol/Avocet® Fuel Mixture Operation in 8V-71 Engine

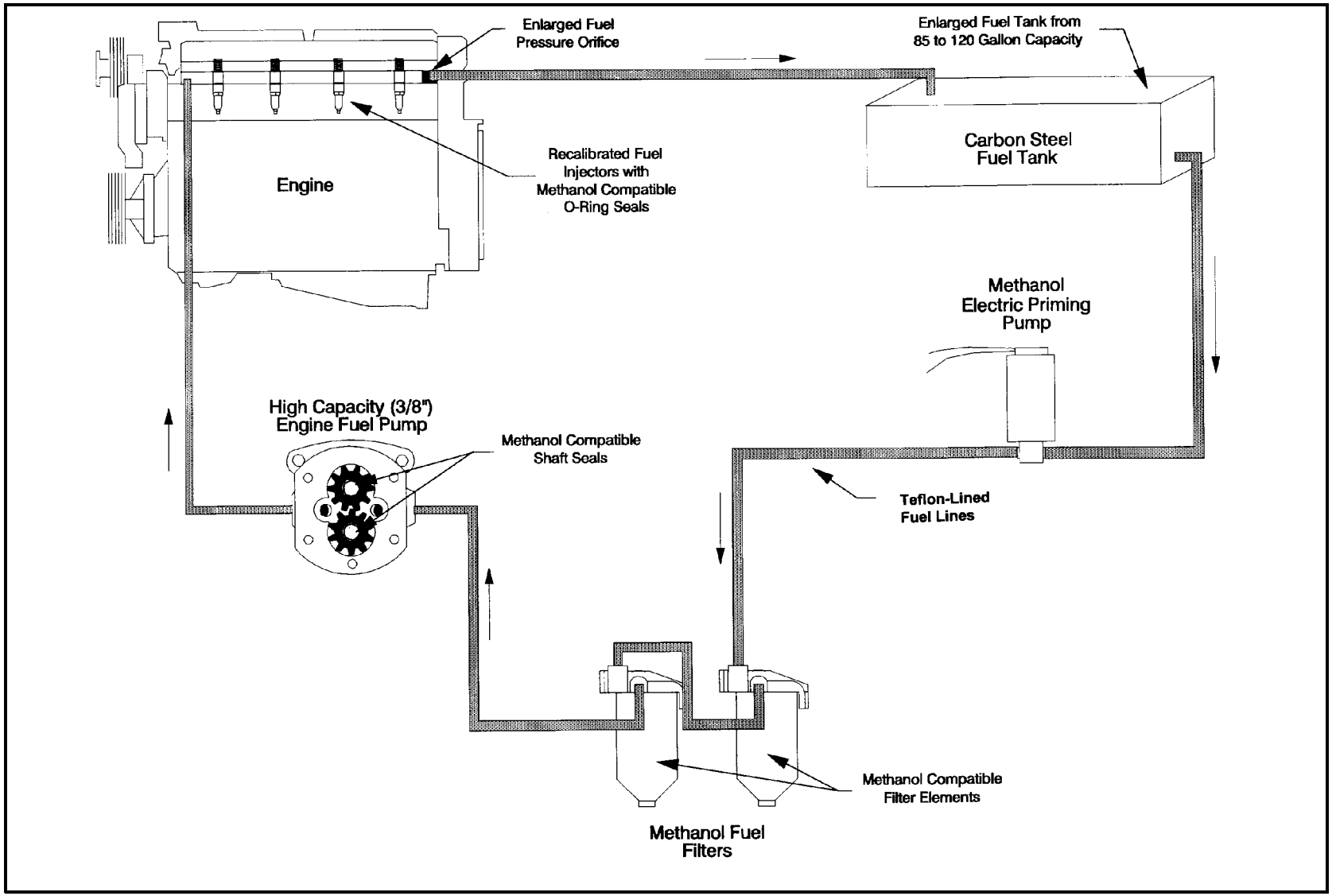

the engine bay for methanol/Avocet® fuel operation. Dry chemical systems work very favorably on methanol fuel fires and, therefore, one was chosen for use on the ignition-improved methanol bus.

DDC was the first heavy-duty engine manufacturer to emissions-certify a production methanol engine, a version of their 6V-92TA engine (Figure 3.2). At the time of certification, the engine had the lowest NO_x emissions of any heavy-duty engine certified to date as well as very low particulate emissions. It used straight methanol as well as M85 as fuel. This engine is no longer in production—the base engine has been replaced by a new design (the Series 50) for which DDC has not provided a methanol version.

Figure 3.2 DDC Methanol Heavy-Duty Engine

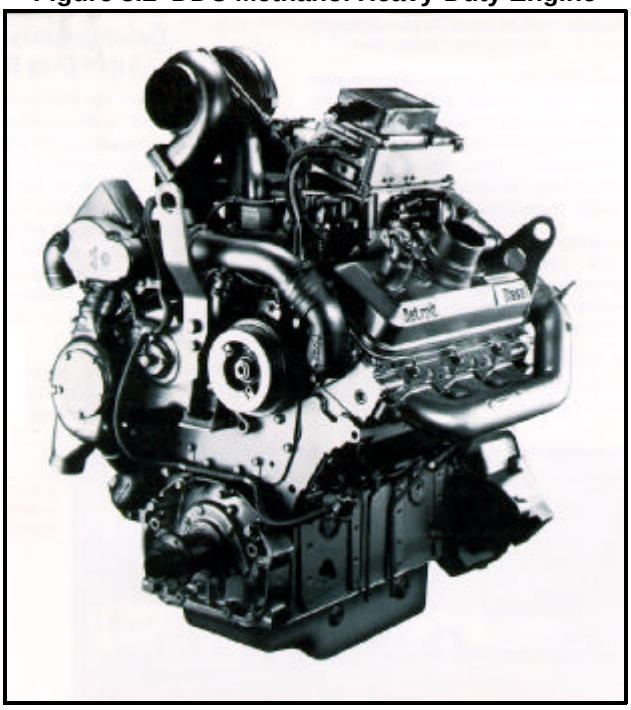

Fuel Economy

Since methanol has less than half the energy density of diesel fuel (it takes 2.3 gallons of methanol to equal 1 gallon of No. 2 diesel fuel), the fuel economy (miles per gallon) of methanol vehicles will be reduced accordingly. If the fuel economy of a methanol bus was 1 mile per gallon (mpg), and that of a similar diesel fuel bus was 2.3 mpg, they would both be using fuel with the same efficiency. The following paragraphs present the results of fuel economy tests conducted on transit buses fueled with ignition-improved methanol and diesel fuel. These results should be representative of comparative tests of other heavy-duty vehicles, and not just transit buses.

Daily mileage accumulation and fuel consumption data were collected for the methanol/Avocet® and diesel fuel control buses operating at JFK Airport over a period from August 1991 to February 1992 as a means of determining in-use bus fuel economy on the two fuels. The diesel fuel used was a commercially available No. 1 diesel fuel. The cumulative average fuel economy of the bus using methanol/Avocet® over the given operational period was about 1.21 mpg as shown in Figure 3.3. The cumulative average fuel economy of the control bus was 2.86 mpg.

Figure 3.3 Cumulative Methanol/Avocet and Diesel Bus Fuel Economy

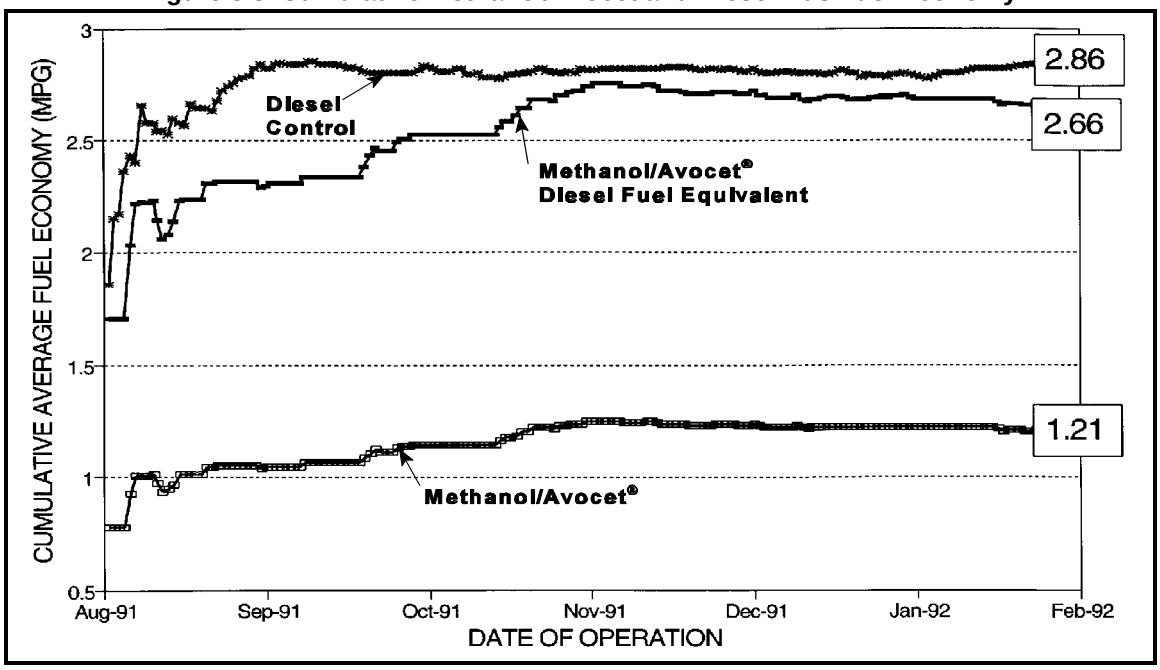

The cumulative average fuel economy of the bus using methanol/Avocet® fuel on a diesel fuel gallon-equivalent basis is also displayed, based on a ratio of 2.2 gallons of methanol/Avocet® per gallon of No. 1 diesel fuel. The gallon-equivalent fuel economy of the bus using methanol/Avocet® was only slightly lower than that of the diesel fuel control bus for the majority of the operational period. A statistical analysis of the final cumulative average fuel economies on the two fuels determined that no significant difference existed between the diesel fuel gallon-equivalent fuel economy values for methanol/Avocet® and diesel fuel at the 95% confidence level.

New York City (NYC) tested six transit buses powered by DDC's methanol engine using straight methanol as fuel. The methanol buses' overall fuel economy was 1.23 miles per gallon, very similar to that observed for the methanol transit buses operating at JFK Airport. However, the ratio of methanol to diesel fuel consumption in the NYC methanol buses was 2.6, indicating lower energy efficiency.[2] The difference could be due to the differences in the ignition and combustion systems of the two engines. Compared to its diesel counterpart, DDC's methanol engine has been demonstrated to have lower efficiency at low speeds and loads typical of urban operation such as in NYC, but higher efficiency at high loads. It would be expected that the ignition-

[2] "City of New York Methanol Bus Program - Report #16," by Carmen De Jesus, New York City Department of Transportation, July 1992.

improved methanol engine would have nearly the same efficiency, since ignition-improved methanol has essentially the same combustion characteristics as diesel fuel, and no other part of the engine has been changed.

Fuel Operating Cost Comparison

Because of the difference in energy density, the price of methanol should be 45% that of diesel fuel or lower. Over the past few years, the price of methanol has occasionally risen far above this point because of a temporary decrease in production capacity. Methanol prices have traditionally been in the range of 50% to 100% of the price of diesel fuel (before taxes). It is postulated that if more large volume methanol plants are constructed, the price of methanol should fall to a level that would be competitive with petroleum fuels.

Until that happens, it appears that methanol will be more expensive than comparable petroleum fuels. In New York State, the present tax structure discourages methanol use by taxing it at $0.34 per gallon, compared to diesel fuel at $0.55 per gallon. When taking the difference in energy content into account, the tax on methanol is equivalent to $0.78 per equivalent diesel gallon.

Ignition improvers are typically almost as expensive as the methanol itself. For typical concentrations of 3% to 6%, the cost of the ignition-improvers will be $0.50 to $1.00 per gallon of fuel. Obviously, this makes ignition-improved methanol very expensive compared to diesel fuel. For heavy-duty vehicles, fuel cost is usually very important and can easily overwhelm capital cost differences on a life-cycle basis. While large volume production of methanol could bring down its price, it is difficult to foresee a situation where ignition-improved methanol could compete in price unless petroleum fuel greatly increases in price.

Reliability and Durability

Reliability and durability of methanol heavy-duty vehicles is a function of the degree of new technology included and the experience gained with that technology. Following this line of reasoning, it would be expected that heavy-duty methanol engines manufactured specifically for methanol fuels might be more reliable than their counterparts which have been modified for straight methanol[3] operation. This has been the case. For the ignition-improved methanol heavy-duty vehicles, most of the reliability problems have been with the onboard vehicle fuel systems and not with the engines themselves. Most of the problems have been related to materials compatibility (primarily elastomers), which should become less of a problem as suppliers learn which elastomers are completely methanol-compatible. Other problems have been inherent to installation of methanol fuel systems on existing buses. The reliability of the heavy-duty methanol engines used by New York City in transit buses was not as good as the ignition-improved engines. New York City reported problems with

[3] "Straight" refers to pure methanol without anything else mixed with it.

injectors, glow plugs, glow plug controllers, bypass regulators, and fuel filters.[4] All these components were specially modified for methanol operation, and apparently lacked the same level of refinement that diesel engine components have. The New York City experience was used by DDC to improve their methanol engines to the benefit of subsequent customers.

One positive attribute of ignition-improved methanol heavy-duty engines is improved cold-start performance relative to diesel engines. This performance is believed to be due to the lower viscosity of methanol, which allows a finer fuel spray at cold temperatures, combined with the advantageous ignition characteristics of ignition-improved methanol. Ignition-improved methanol heavy-duty engines start easily and quickly in the coldest weather without the white smoke typical of diesel engine cold-starts.

Emissions

The use of methanol in heavy-duty engines has two primary emissions advantages: lower particulates and lower NO_x. Lower particulate emissions result from the chemical and combustion characteristics of methanol, which does not form the carbon agglomerates or sulfates that are the basis of particulate matter from diesel combustion engines. Lower NO_x emissions are due to the high latent heat of vaporization of methanol, which cools the combustion chamber and results in lower peak flame temperatures than when using diesel fuel.

Heavy-duty methanol vehicle emissions data are presented in the following sections. Figures for straight methanol used in 1993 model-year transit buses in New York City (chassis dynamometer testing using the CBD15, NYBus, and NYBC cycles[5]) and ignition-improved methanol used in a 1979 DDC 6V-70 heavy-duty engine (engine dynamometer testing using the 13-mode test[6]) destined for transit bus use also were included. In each case, methanol emissions are compared to diesel emissions.

---

[4] "City of New York Methanol Bus Program - Report #16," by Carmen De Jesus, New York City Department of Transportation, July 1992.

[5] The CBD15 cycle is a simulation of a transit bus in the central business district of New York City. The NYBus cycle is a simulation of transit bus operation in urban areas of New York City, while the NYBC cycle is a simulation of transit bus operation in suburban areas of New York City.

[6] The 13-mode cycle is an emissions test for heavy-duty engines developed by the Environmental Protection Agency to simulate typical heavy-duty engine operation.

Figure 3.4 Unburned Fuel Emissions from Straight and Ignition-Improved Methanol

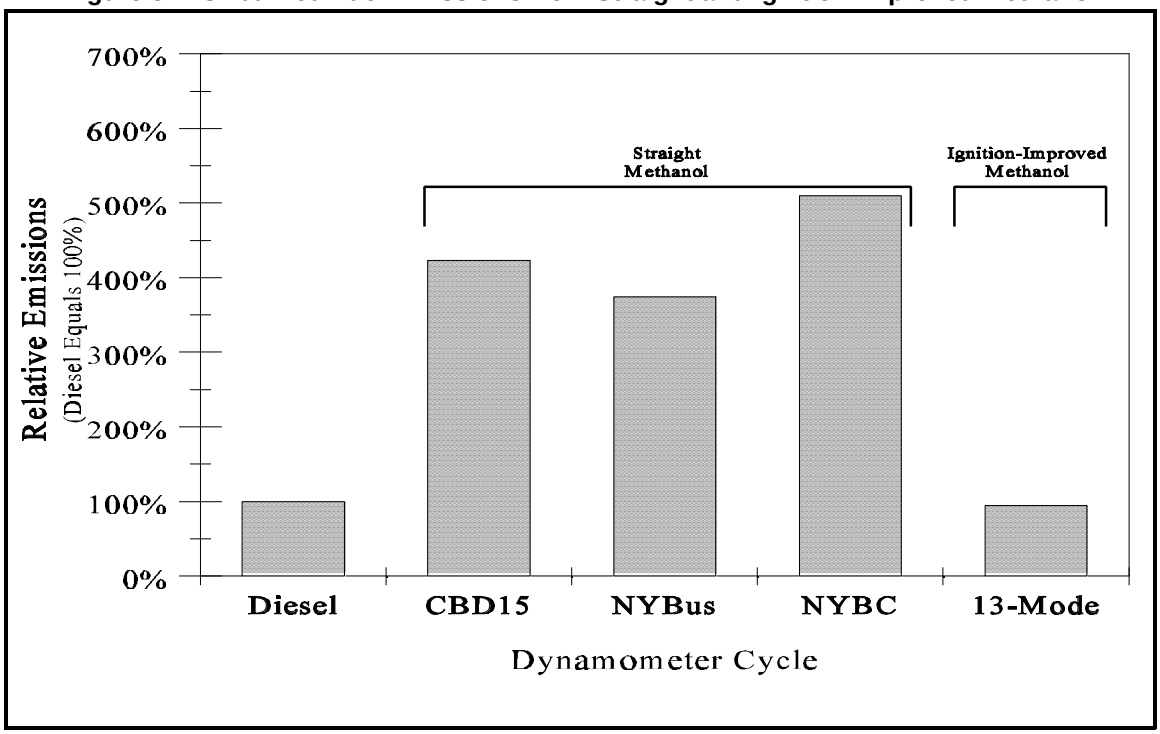

Comparisons of unburned fuel emissions are made in Figure 3.4. The straight-methanol engine had much higher unburned fuel emissions than its diesel counterpart. These emissions are primarily due to the combustion characteristics of the straight-methanol engine, which has high unburned fuel emissions at low engine speeds and loads that predominate in the transit bus driving cycles used to test this engine. This increase is tempered somewhat by the fact that unburned methanol is less reactive than unburned hydrocarbons from diesel fuel. The ignition-improved methanol engine had essentially the same unburned fuel emissions as when operating on diesel fuel. (The emissions comparison for ignition-improved methanol was made using one engine by installing the proper injectors for each fuel.)

For emissions of carbon monoxide (CO), the straight-methanol engine showed similar levels, except over the NYBC cycle, where an increase of 92% was observed compared to using diesel fuel (Figure 3.5). The ignition-improved methanol engine produced just 67% the CO emissions compared to diesel fuel operation.

Straight-methanol engines have a distinct advantage over diesel counterparts in the level of emissions of NO_x (Figure 3.6). Emissions of NO_x for straight methanol were just 25% of those for diesel fuel. This advantage was lost with the ignition-improved methanol engine, which had the same NO_x emissions as when using diesel fuel. The reason the ignition-improved methanol caused higher NO_x emissions is

Figure 3.5 Carbon Monoxide Emissions for Straight and Ignition-Improved Methanol

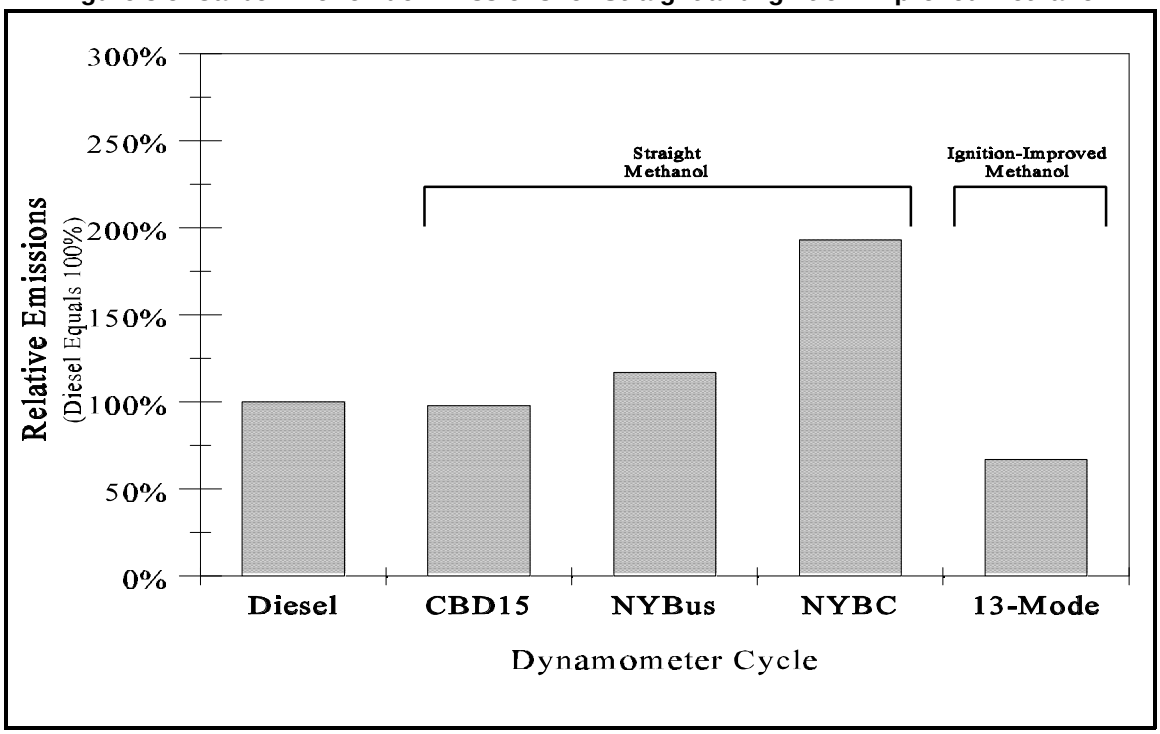

believed to be due to the nitrogen content of the ignition improver itself. If less ignition improver were required, the increase in NO_x emissions is also likely to be less.

Particulate emissions of methanol offer an advantage over diesel fuel combustion. Figure 3.7 illustrates that the straight-methanol engine produced only 27% to 40% of the particulates of a similar diesel fuel version. The ignition-improved engine produced only 79% of the particulates compared to diesel fuel operation. The reason that particulates are not reduced to zero is that any engine oil consumed by the engine contributes significantly to particulate emissions. This fact was especially true of the ignition-improved methanol engine, which was not only a well-worn engine, but one that was designed before oil consumption control strategies were introduced to control particulate emissions.

Formaldehyde emissions are a weakness of methanol engines. Formaldehyde is a combustion intermediate of methanol and thus it is not surprising that formaldehyde would be present in methanol engine exhaust gases. Conversely, only small amounts of formaldehyde are produced as a by-product of petroleum fuel combustion. Formaldehyde has a pungent odor that tends to make eyes water, is a primary contributor to diesel engine exhaust odor, and is a suspected carcinogen. The straight-methanol engine had formaldehyde

Figure 3.6 Oxides of Nitrogen for Straight and Ignition-Improved Methanol

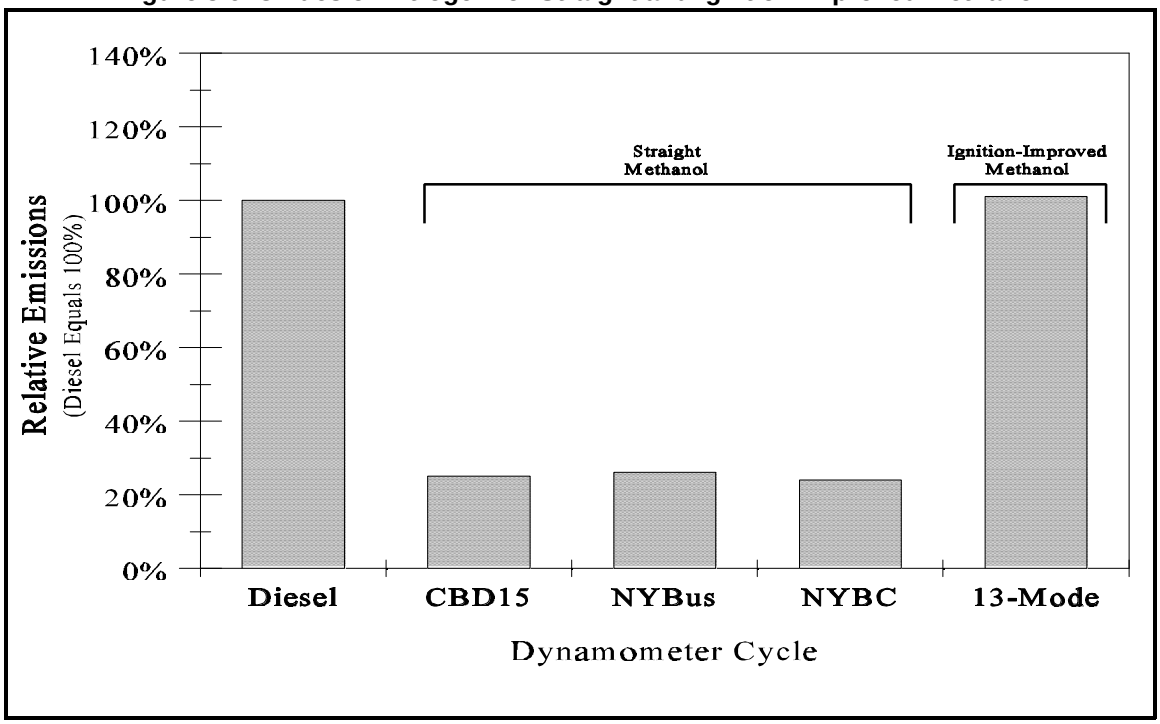

Figure 3.7 Particulate Emissions for Straight and Ignition-Improved Methanol

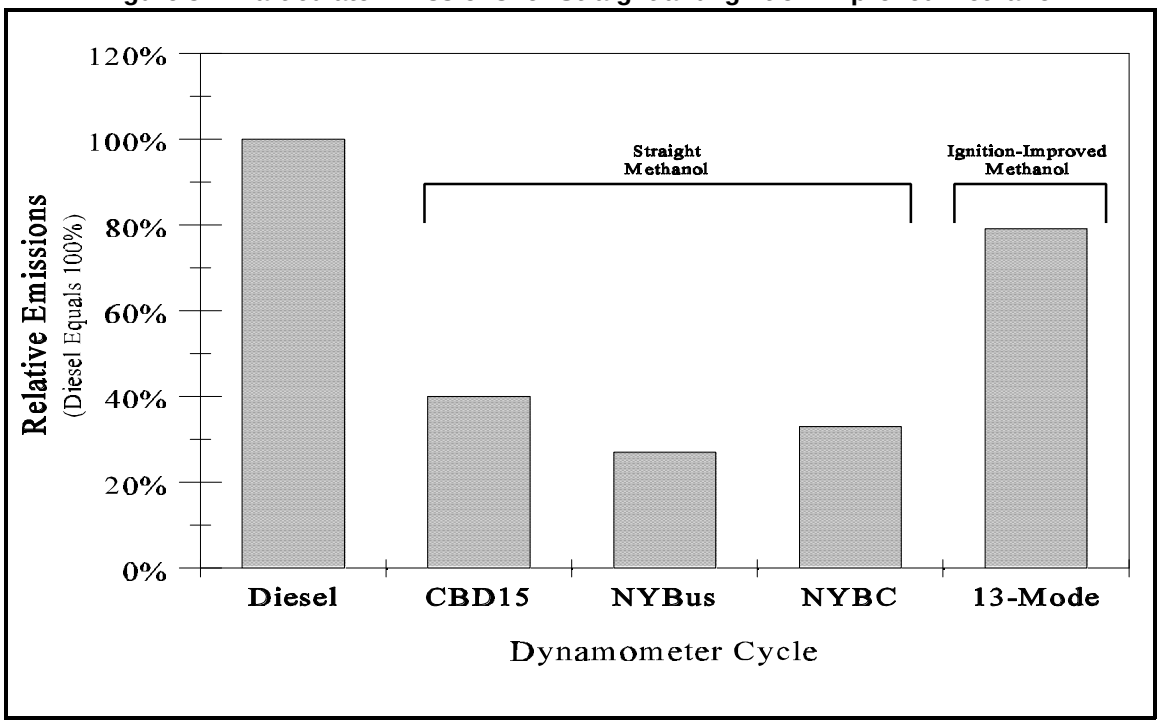

Figure 3.8 Formaldehyde Emissions for Straight and Ignition-Improved Methanol

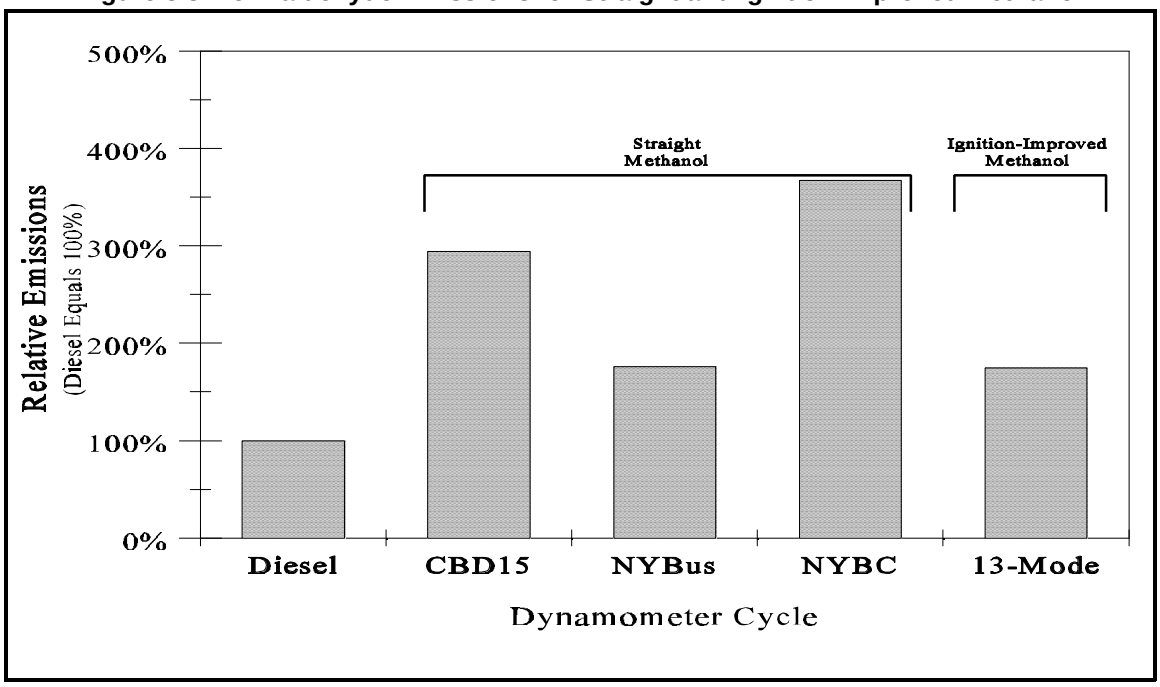

emissions that were between 177% and 267% higher than a similar engine using diesel fuel (Figure 3.8). The ignition-improved methanol engine had formaldehyde emissions 75% higher than the same engine using diesel fuel. In an ironic twist, the oxidation catalyst of the straight-methanol engine (the ignition-improved methanol engine did not have one) likely contributed to formaldehyde emissions by partially oxidizing some of the unburned fuel emissions coming from the engine. At higher engine speeds and loads, the catalyst is hot enough to completely oxidize unburned fuel emissions. Since the transit bus driving cycles used to test the straight-methanol engine emphasize low-speed and light-load operation, it is likely that this represents a worst-case situation for formaldehyde emissions from heavy-duty methanol engines.

Greenhouse Gases

For an equal amount of fuel energy, methanol combustion produces 6% less CO_2 emissions than diesel fuel, though this advantage is erased by the additional greenhouse gases produced during methanol production relative to diesel fuel production. Moreover, methanol heavy-duty engines in transit buses have demonstrated fuel energy consumption between 13% and 25% higher than similar diesel engines. Accounting for the CO_2 emissions from the relative increase in fuel energy consumed, the greenhouse gases of heavy-duty methanol transit buses would be expected to increase a similar percentage as the increase in fuel energy used relative to diesel fuel.

Refueling Infrastructure

Refueling heavy-duty engines with methanol does not present any technological challenges other than ensuring that all the components are methanol-compatible. Because it takes 2.2 gallons of methanol to equal 1 gallon of diesel fuel and most heavy-duty methanol vehicles will have increased fuel storage capacity to maintain vehicle operating range, refueling will take longer unless the flow rate is increased to compensate. Refueling time is a concern for heavy-duty vehicles such as transit buses. "Dry-break" fuel dispensing systems are well-suited to refuel heavy-duty methanol vehicles because flow rates can be increased with a lower chance of spills and refuellers are protected from direct contact with methanol or methanol vapors coming from the fuel tank. Such systems also include positive fuel shut-offs that prevent overfilling of the fuel tank, which is more likely to occur when refueling rates are high.

Figures 3.9 and 3.10 illustrate the AFV-FDP demonstration refueling system designed for heavy-duty fleet vehicles and installed at a site owned by Yankee Trails. It delivered up to 35 gallons per minute of methanol and recovered the fuel vapors expelled from the vehicle tank during refueling. The dispensing system consisted of a 1,000-gallon above-ground fuel storage tank, a high-volume submersible fuel pump, a pedestal-mounted meter, and a dry-break type dispensing nozzle.

The storage tank is a 1,000-gallon Convault aboveground tank. The inner tank (holding the fuel) is made of flat mild steel plates welded together and pressure tested. The steel is wrapped in plastic (providing secondary containment) and encased in concrete.

Several safety features have been incorporated into the fuel system design. At the outlet of the pump is a leak detection unit that limits fuel flow in the event of a leak in the fuel piping downstream of the detector. A normally closed solenoid valve in the fuel line prevents fuel from siphoning out of the tank when fuel flow is not desired. A safety shear valve with a fusible link is designed to interrupt fuel flow if there is a fire near the fuel piping. A three-element filter unit helps ensure that clean fuel is supplied to the vehicle.

The refueling nozzle is an Emco Wheaton dry-break nozzle specifically designed for heavy-duty vehicles and made methanol-compatible. The inherent design of the nozzle along with a fill limiter valve allows complete refueling (up to 90% of the tank volume) without any spillage of fuel. Displaced vapor from the bus tank is captured and returned to the bulk storage tank using another dry-break connector. This design practically eliminates human exposure to fuel and fuel vapors during refueling.

Figure 3.9 Side View of Aboveground Methanol Refueling System

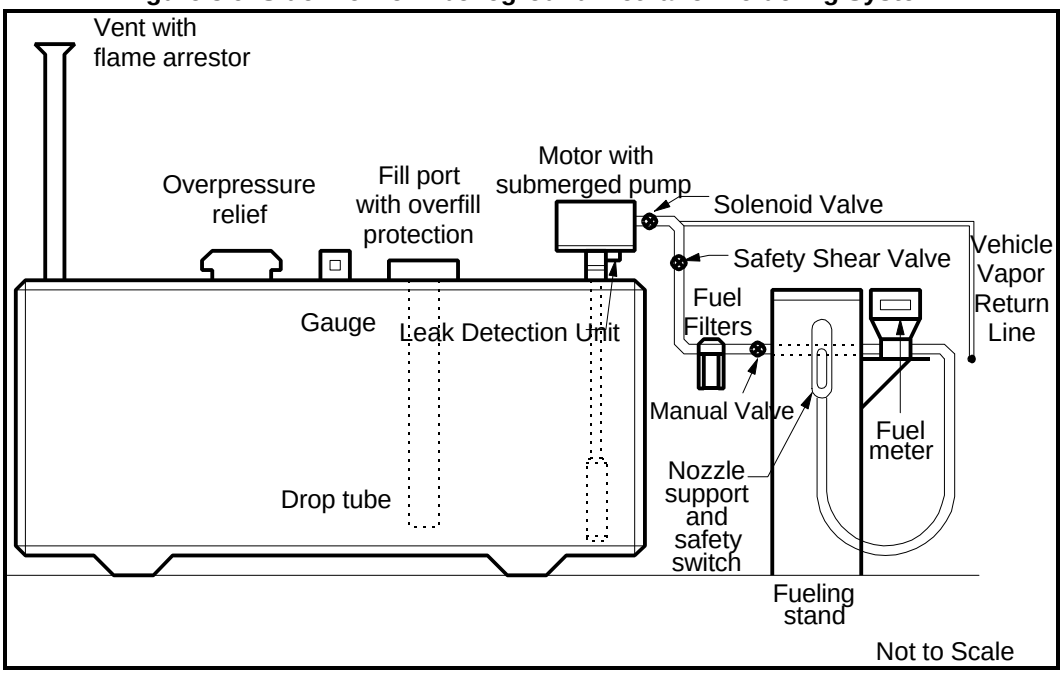

Figure 3.10 Top View of Aboveground Methanol Refueling System

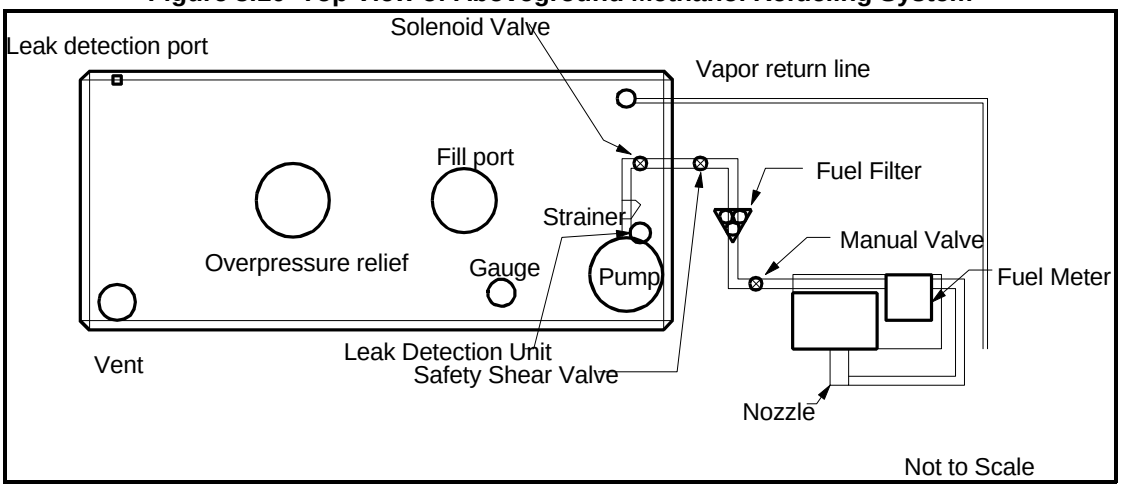

Methanol can be stored in most types of fuel storage tanks. While steel is the preferred material for tanks, a special type of fiberglass has been developed for methanol storage. Any methanol storage system must have secondary containment and underground piping must be double-walled. No aluminum can be allowed in any part of the fuel storage and dispensing system. Methanol will quickly corrode aluminum and aluminum corrosion products will foul filters and engine fuel systems. Some success has been gained with anodized or plated aluminum parts, although such materials will corrode if the surface has any imperfections to allow

contact between methanol and the underlying aluminum. With regard to corrosion potential, exposure to methanol vapor appears to cause more corrosion than exposure to liquid methanol.

One difference between methanol and petroleum fuel storage is that methanol is hygroscopic, so exposure to water vapor must be minimized. This is accomplished by installing a conservation vent that limits movement of air in and out of the tank due to temperature changes.

Storage and Maintenance Facility Modifications

The safety concerns of storing and maintaining methanol vehicles indoors are similar to those for petroleum fuels, with a few differences. Similar to petroleum fuels, methanol vapor is heavier than air, so methanol vapor released from spills will travel close to the ground. Garage facilities built to existing codes for petroleum fuel should be adequately configured to avoid ignition of methanol vapor by the building's electrical system. A major difference for methanol compared to petroleum fuels is that methanol burns with a flame that is not visible in direct sunlight. Inside a garage, clues of a methanol fire may be easier to spot, but flame detection sometimes requires placing something flammable, such as a broom, in the area where a fire is suspected. Dry powder fire extinguishers (A-B-C) are very effective at extinguishing methanol fires and water in sufficient quantity is also effective. A large pool of burning methanol is best attacked using foam-based fire extinguishers.

Another difference between methanol and petroleum fuels is that methanol is soluble in water, rendering oil and water separators ineffective for fuel spills. Spilled methanol should be cleaned up using absorbent material, which should be disposed of as hazardous waste.

Maintenance personnel should not allow prolonged contact of methanol with their skin since it is readily absorbed through the skin. Similarly, to minimize methanol build-up in the body, methanol vapors should not be inhaled over a prolonged period. Methanol will be metabolized by the body over the period of a few hours and damage will not occur unless methanol is ingested faster than it can be broken down and eliminated by the body.

Eye washes should be present in any garage facility where methanol vehicles are maintained. Methanol may be released from fuel systems under pressure and protective eye wear should always be worn when working on fuel systems where methanol might be under pressure.

Other Demonstrations

New York City. Triboro Coach Corporation in Queens was among the first transit properties in the U.S. to operate transit buses powered by the DDC 6V-92TA methanol engine. The first six methanol buses were donated to New York City by General Motors Corporation (GM) as part of a Settlement Agreement to make up for approximately 570,000 automotive engines produced by GM in 1979 that exceeded the 1979 Federal emissions standards for oxides of nitrogen. The EPA asked New York City to participate by accepting ownership of the buses and performing in-service testing of bus performance and emissions. The test program was initiated in May 1988 after all six buses were received from GM, the refueling facility was installed, and a methanol purchase contract was in place.

The first three years of operation of the six methanol buses were intended as a durability demonstration. During this time the six methanol buses collectively traveled over 700,000 miles and several improvements in the DDC methanol engine were made in anticipation of production for other transit properties. Problems with the original configuration of the engine were found with the fuel injectors, glow plugs, glow plug controller, cylinder heads, valves and seats, and fuel pump gears. Overall, the methanol buses were less reliable and less fuel efficient relative to buses using the diesel fuel version of this engine during this time. DDC advanced through four different evolutions of methanol engine design during these three years, addressing the problems discovered by operation of the buses by Triboro. In addition to mechanical revisions, Lubrizol developed a methanol fuel additive that was a significant contributor to solving fuel injector spray tip hole plugging and injector plunger scoring.

The DDC methanol engine had inherently low emissions from the start, but development lowered the emissions even more. By the end of the three-year durability demonstration, the DDC methanol engines had significantly lower hydrocarbon, oxides of nitrogen, and particulate emissions, compared with the diesel fuel version of the engine. At the time, the DDC methanol engine was by far the cleanest heavy-duty engine available. Fuel efficiency had also advanced to the point that the engines were using 2.6 gallons of methanol where 1 gallon of diesel fuel would be used. (Parity would be 2.2, and the DDC goal was 2.5.)

The durability demonstration phase of the Settlement Agreement was completed at the end of April, 1992, and Phase III was initiated which included bringing the methanol engine to commercial production, and expansion of the demonstration of methanol buses in New York City. Twelve more methanol buses were purchased by New York City and all 18 buses are still in operation.

Los Angeles. The Los Angeles County Metropolitan Transportation Authority has the largest fleet of methanol transit buses operating in the U.S. In 1989, they acquired 30 methanol buses manufactured by TMC, followed by 303 more delivered in the latter half of 1992 and the first half of 1993. All of these buses use the DDC 6V-92TA straight methanol engine (Figure 3.2) that was also used in the New York City methanol transit buses. These buses collectively travel approximately 1.2 million miles per month and consume approximately a million gallons of methanol per month. The fuel efficiency of these buses ranges between 1.1 and 1.2 miles per gallon of methanol (2.4 to 2.6 diesel fuel equivalent miles per gallon) depending on the route, compared to 3.4 miles per gallon for the typical diesel transit bus.[7]

The most common engine problems experienced by the Los Angeles methanol transit buses have included leaking internal engine seals that allow engine coolant to get into the engine oil with predictable consequences—leaking injectors, burned-out glow plugs, and problems with the bypass blower hardware. These failures are unique to the methanol engines (with the possible exception of leaking internal gaskets that could occur with diesel versions of the engine). The methanol engines are more expensive to maintain than the comparable diesel engines but an analysis to quantify the difference has not been completed. The typical methanol engine in the Los Angeles fleet operates around 60,000 to 70,000 miles before a major repair is needed, such as replacement of a damaged piston and liner. The typical diesel engine in the Los Angeles fleet (also a DDC 6V-92TA) is able to operate in the range of 200,000 to 250,000 miles before needing similar major repairs.

Los Angeles also experimented with ignition-improved methanol using 1981 model RTS transit buses having mechanical injection versions of the DDC 6V-92TA engine.[8] The ignition improver used was Avocet®, the same ignition improver used in the NYSERDA tests of ignition-improved methanol in diesel engines. The initial modifications included larger injectors and fuel system changes to accommodate methanol. It was found that 5 volume percent Avocet® was needed to obtain acceptable operation. The modified buses operated well but the cost of Avocet® was higher than desired. By incorporating higher compression cylinder kits (23:1) and a revised blower bypass system, the amount of Avocet® needed was reduced to 1.5 volume percent in the summer and just less than 2 volume percent in the winter. Even though significant success was achieved to reduce the amount of Avocet® required, the cost of engine modification combined with the cost of the Avocet® made the use of ignition-improved methanol economically infeasible compared to straight methanol engines,

---

[7] Conversation with Mr. George Karbowski, Equipment Maintenance Supervisor, Los Angeles County Metropolitan Transportation Authority, November 15, 1995.

[8] Wuebben, P., Unnasch, S., Pellegrin, V., Quigg, D., and Urban, B., "Transit Bus Operation with a DDC 6V-92TAC Engine Operating on Ignition-Improved Methanol," SAE Paper No. 902161, SAE International, 400 Commonwealth Drive, Warrendale, Pennsylvania, 15096-0001.

which already cost more to operate than the comparable diesel engine. (This economic disadvantage does not take any credit for the emissions reductions methanol engines have over diesel engines.)

From 1989 through 1994, the price Los Angeles paid for methanol was in the range of 40 to 50 cents per gallon, while the price for diesel fuel was 60 to 70 cents per gallon. The equivalent fuel cost when using methanol was 25% to 83% more than when using diesel fuel. In 1994, the price of methanol increased to a maximum of 75 cents per gallon (the spot price of methanol went to over $1 per gallon) but has since declined to 50 cents per gallon again. The high cost of methanol and potential for price spikes has caused Los Angeles to explore the use of ethanol in these buses. Since May of 1995, 70 of the methanol buses have been operating on ethanol (only a software change is necessary to accommodate use of ethanol). The current price being paid for ethanol is $1.10 per gallon (approximately $1.80 per diesel fuel gallon equivalent) delivered with lubricity additive included. Based on experience of a transit property in Illinois, it is believed that ethanol could potentially be available for a cost of $0.70 per gallon, which would be competitive with the current price paid for methanol.

Los Angeles has explored the use of several alternative fuels and, while they are not finished evaluating ethanol, they have come to the conclusion that the cost of methanol is too high relative to diesel fuel to consider adding more methanol buses.

Lessons Learned

Retrofit Technology. Retrofit to ignition-improved methanol has proven to be straightforward and does not require a high skill level to accomplish. The largest challenge has proven to be modifying onboard fuel systems to handle a volatile fuel (diesel fuel has insignificant vapor pressure). Addition of electric fuel pumps may be required to supplement mechanical fuel pumps to move methanol without the occurrence of vapor lock. DDC recommends that the mechanical fuel pump be replaced entirely by an electric one that can generate sufficient fuel pressure. However, fuel pumps of this size have large electrical current draws that may overwhelm the capacity of the electrical system on older buses. Tank venting is more of a concern than with diesel fuel. All these items must be worked out via trial and error with solutions varying by bus model and fuel system configuration.

Newly designed straight-methanol engines can be retrofitted into older buses, though these engines incorporate several electronic controls that may not interface well with older bus electrical systems. In addition, the electrical current demands of straight-methanol engines (high pressure fuel pumps and glow plugs used for low-speed and light-load operation) are larger than for diesel versions of similar engines and could easily overwhelm the capacity of those systems. This problem is often difficult to recognize since the electrical

system capacity may degrade over time without any noticeable effects on operations until a new large load is added to the system. Most retrofit problems have involved the ancillary systems and were not caused by contact with methanol.

Ignition-Improved Methanol Economics. At present, ignition improvers are not economically viable. The justification for ignition-improved methanol would be low capital cost for engine conversion compared to implementation of new, straight-methanol engines or diesel engine emission controls. However, the cost of ignition improvers quickly negates the capital cost savings of fuel system retrofits. As an example, EPA has recently implemented regulations requiring that when all 1993 model year and older transit bus engines are rebuilt, they include emission control systems that will reduce particulate emissions by at least 25% and cost less than $2,000 in capital costs. Ignition-improved methanol would be able to generate the 25% reduction in emissions, and the capital costs of converting the bus would be close to $2,000, but when the cost of the ignition-improver is included, the ignition-improved methanol cannot compete economically with particulate control devices such as catalysts, which do not require those engine changes that are typically needed to convert to methanol use. One possible application for ignition-improved methanol would be for use in older buses of a bus fleet that is being converted entirely to straight-methanol operation. This would allow the switch to be made to methanol fuel for the entire fleet at once, though separate fuel storage would be required for straight-methanol and ignition-improved methanol.

NATURAL GAS

Fuel Description

Natural gas is a favored fuel for heavy-duty engines because it burns without particulate emissions and it can be burned lean enough to have low NO_x emissions. Particulate emissions and NO_x are the two emissions that are very difficult to control for diesel heavy-duty engines using diesel fuel. The primary trade-off for these lower emissions is reduced engine efficiency because, to date, natural gas heavy-duty engines have been spark-ignited, making their fuel consumption 10% to 20% higher than similar diesel cycle engines. (For a discussion of natural gas origins and reserves, see Light-Duty Vehicles, Natural Gas, Fuel Description, starting on page 2-1.)

The properties of natural gas are compared to diesel fuel in Table 3.2. Besides being a gas at room temperature instead of a liquid, natural gas is also very different from diesel fuel in that it is primarily composed of methane instead of a wide range of hydrocarbons. It is one of few fuels that is lighter than air instead of heavier than air, which is a safety advantage in most cases except when vehicles are indoors. The high autoignition temperature of natural gas makes it difficult to ignite (also a safety feature), while its low

cetane rating and high octane rating indicate that it is a poor diesel engine fuel and a very good spark ignition engine fuel.

Table 3.2 Properties of Natural Gas and Diesel Fuels

Fuel Property	Natural Gas	No. 1 Diesel Fuel	No. 2 Diesel Fuel
Distillation Range, °F	NA[1]	300 to 600	400 to 700
Weight, lb/gal	5.6 to 6.4 [2]	6.0 to 6.5	6.7 to 7.4
Flash Point, °F	NA	100 (min)	125 (min)
Vapor buoyancy	lighter than air	heavier than air	heavier than air
Lower Heating Value, Btu	925-950/scf [3]	124,000-126,000 per gallon	128,000-130,000 per gallon
Autoignition Temperature, °F	1,004 [4]	400 to 500	400 to 500
Octane Rating, (R+M)/2	130	NA	NA
Cetane Rating	NA	40 to 55	40 to 55

[1] Methane boils at a temperature of -260°F.
[2] The weight of natural gas with the same energy content as a gallon of No. 2 diesel fuel—range typical of the natural gas in New York State.
[3] Typical values for natural gas in New York State.
[4] 100% methane.

The major disadvantage of natural gas as a vehicle fuel is that it is difficult to store enough onboard to achieve similar operating range as when using petroleum fuels. Figure 3.11 illustrates the differences in energy storage density for compressed natural gas (CNG) relative to diesel fuel. CNG storage pressures of 2400 psi were once common but have given way to 3000 psi and 3600 psi. Even at 3600 psi, CNG needs 3.35 times the fuel storage volume relative to diesel fuel. In addition, CNG cylinders are presently constrained to spherical and cylindrical shapes to withstand the internal pressures. Thus, the overall effective change in fuel system volume is greater than that presented in Figure 3.11, and is dependent on the space available in the vehicle. CNG cylinders also weigh significantly more than the tanks used for petroleum fuels. Reinforced aluminum cylinders weigh about 25 pounds per equivalent diesel fuel gallon while composite cylinders weigh about half as much. For heavy-duty vehicles where fuel capacities of 100 gallons of diesel fuel are not uncommon, this means that

Figure 3.11 Volume Needed to Store Equal Amounts of Energy, CNG Compared to No. 2 Diesel Fuel (Fuel Only, No Hardware)

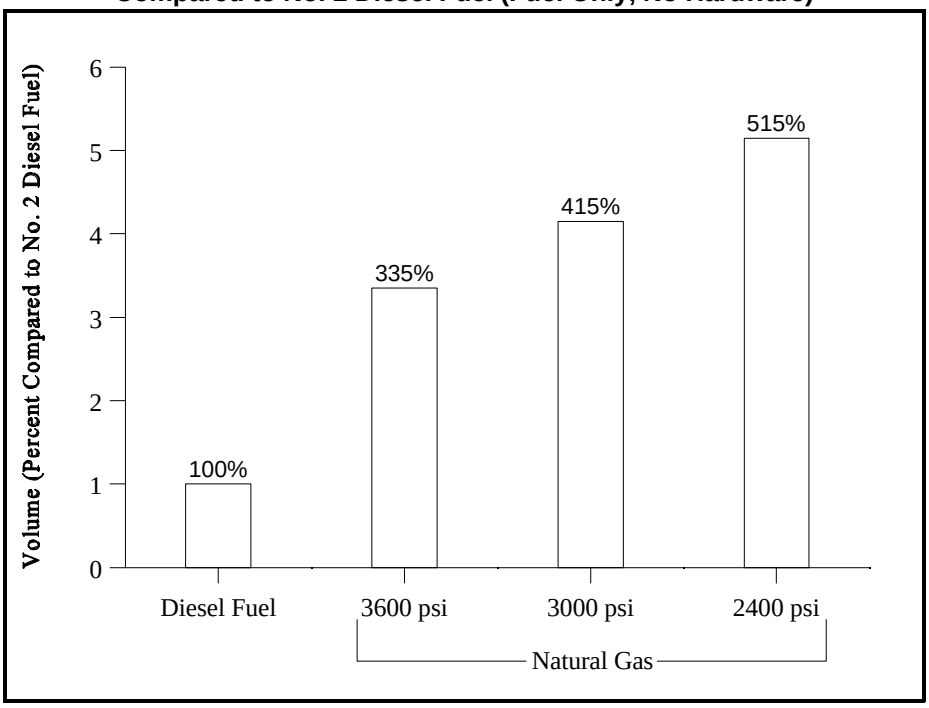

the empty weight of the CNG cylinders would be 1,500 to 3,000 pounds. Valving, lines, and regulators add significant additional weight to this amount. The high weight of the fuel cylinders decreases vehicle load-carrying capacity, and decreases vehicle performance and fuel efficiency.

An alternative to storage of natural gas as CNG is storage as liquefied natural gas (LNG). Natural gas becomes a liquid at a temperature of -260°F, which requires specially insulated double-walled tanks. A gallon of LNG has about 60% the energy content of a gallon of diesel fuel. Assuming equal energy storage, LNG fuel systems take up about half the volume of CNG systems and overall weight is about half that of the lightest CNG systems. LNG makes use of natural gas practical for heavy-duty vehicles that travel long distances, where CNG is generally considered not to be practical.

Vehicle Technology

All the natural gas engines currently available are spark ignition versions of diesel engines.[9] At a minimum, the cylinder heads, pistons, camshaft, and intake manifold are all changed. An ignition system is added in place of

[9] DDC did market a dual-fuel version of their 6V-92 engine that used both diesel fuel and natural gas (the diesel fuel was the ignition source for the natural gas). The engine idled using diesel fuel only; as engine speed and load increased, the amount of natural gas used also increased.

the fuel injection system. An advantage to this approach is that the natural gas versions fit the same vehicles that used the diesel versions.

Natural gas heavy-duty engines are calibrated to operate on the lean side of stoichiometric, which minimizes emissions of CO and NO_x and increases engine efficiency. However, it tends to increase unburned fuel emissions, so most have added an oxidation catalyst for this reason. Particulate emissions are inherently low from natural gas so no emission control device for particulates is needed.[10]

The trade-off from going to spark ignition operation is that vehicle fuel economy is reduced by 10% to 20%. The reductions are highest at idle; the difference gets smaller as full-load is approached. Diesel engines have very low fuel consumption at idle because of in-cylinder fuel injection and stratified charge combustion, which allows the diesel engine to operate without a throttle, thus greatly lowering pumping losses relative to spark-ignited engines that use a throttle and don't have stratified charge combustion. All current heavy-duty spark-ignited natural gas engines are throttled and use lean but not stratified combustion. Also, their compression ratio is limited to a value less than optimum to account for variation in natural gas composition. These factors combine to reduce the efficiency of heavy-duty natural gas engines relative to diesel versions of the same model engine. Engine designers are exploring ways to burn natural gas in heavy-duty spark ignition engines without incurring these efficiency losses, which should significantly narrow the gap relative to diesel engines.

There are several heavy-duty natural gas engines on the market supplied by Cummins, Detroit Diesel Corporation (DDC), Caterpillar, Deere, Hercules, and Tecogen. Cummins currently has three six-cylinder inline heavy-duty natural gas engines: the 5.9-liter B5.9G, the 8.3-liter C8.3-250G, and the 10-liter L10G (see Figure 3.12). The B5.9G comes in versions rated at 150 and 195 horsepower; the C8.3-250G is rated at 250 horsepower with two torque ratings; the L10G is rated at 280 or 300 horsepower, both at the same torque rating. Cummins is developing natural gas versions of their M11 (11-liter) six-cylinder inline engine as well. DDC is offering four natural gas engines: the S-60G (the natural gas version of the inline six-cylinder, 12.7-liter Series 60 diesel engine) for heavy-duty trucks with 300 to 450 horsepower; the S-50G (the natural gas version of the inline four-cylinder 8.5-liter Series 50 diesel engine) for use in transit buses with 250 to 300 horsepower; the S-40G, an inline six-cylinder, 8.7-liter engine with 250 to 300 horsepower; and the S-30G, a V-8, 7.3-liter engine with 200 to 250 horsepower. (Navistar will market a version of the S-30G, called the T444NG; the S-40G and S-30G are Navistar engines developed by DDC for natural gas operation.) Caterpillar has two natural gas engines available: the G3306, an inline six-cylinder, 10-liter

[10] The latest diesel heavy-duty engines are incorporating catalysts for particulate emission control.

Figure 3.12 Cummins L10G Natural Gas Engine

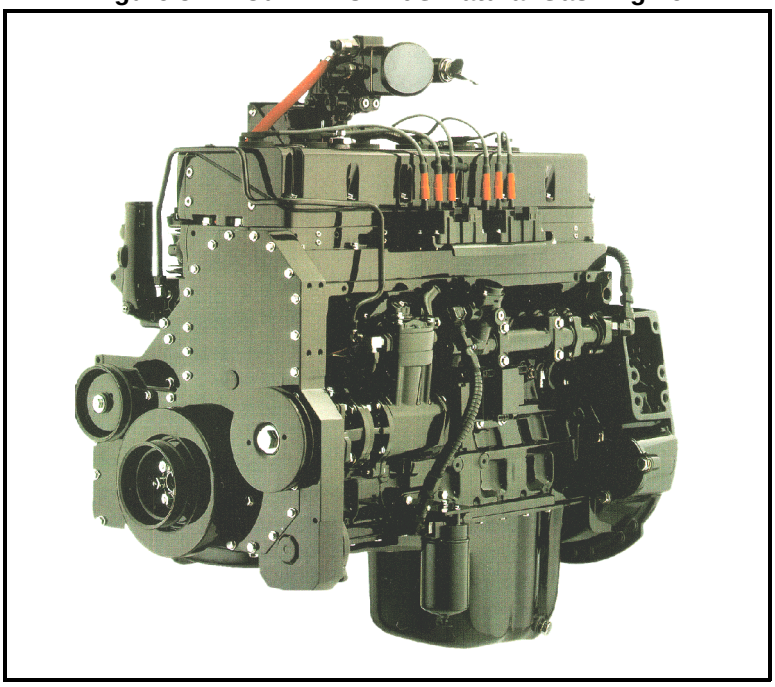

engine with 250 horsepower; and the G3406, an inline six-cylinder, 14-liter engine with 350 horsepower. Deere is offering an inline six-cylinder natural gas engine of 8.1-liters rated at 250 horsepower developed primarily for school and commercial buses. Hercules has developed two natural gas engines: an inline six-cylinder, 5.6-liter engine (GTA5.6L, 190 horsepower) and an inline four-cylinder, 3.7-liter engine (GTA3.7L, 130 horsepower), which are targeted primarily at the school bus market. Tecogen offers a 7.0-liter V-8 engine with 195 horsepower in naturally-aspirated form and 245 horsepower in turbocharged form. Tecogen also offers a 4.3-liter V-6 engine targeted to delivery vehicles.

Natural gas fuel systems consist of storage cylinders, shut-off valves, lines, pressure regulators, and a device to mix the natural gas with air (Figure 3.13). Natural gas fuel systems use the pressure of the natural gas to move it into the engine so no fuel pump is needed. The pressure needed at the fuel mixing device is typically around 100 psi, requiring at least two pressure regulators between the cylinders and the engine. All natural gas cylinders have temperature relief valves to release the natural gas if the cylinder is exposed to fire, otherwise the pressure build-up and loss of mechanical strength from heating could cause cylinder failure. Some cylinders have also incorporated pressure relief valves that release natural gas when the pressure exceeds a set value. Some pressure relief valves have proven to be unreliable, causing numerous unintended fuel releases and creating dangerous situations.

Figure 3.13 Schematic Representation of CNG Fuel System

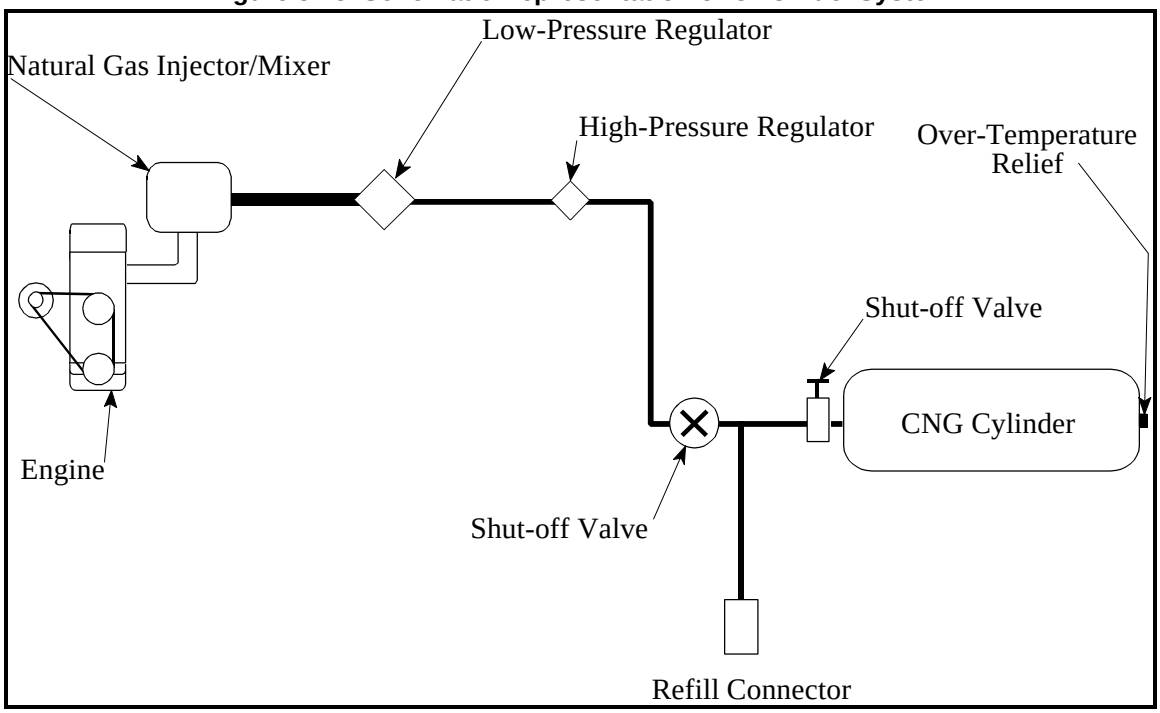

The U.S. Department of Transportation (DOT) is responsible for overseeing the safety of compressed gas cylinders used in vehicles. In the past, cylinders were pressure-tested every three years, which represents a significant expense in terms of the cost of the test and vehicle downtime. However, a new regulation has been implemented that allows cylinders used on vehicles to be used for the life of the vehicle without periodic pressure tests (though annual visual inspections are required). This new regulation represents a significant advance for heavy-duty natural gas vehicles with the only drawback being that the cylinders cannot be used on another vehicle when the original natural gas vehicle is retired, as cylinders could in the past as long as they passed the pressure test.

Most heavy-duty trucks would mount CNG cylinders under the frame or behind the cab for tractor-trailer configurations. School buses mount the cylinders underneath within the frame rails. Transit buses mount CNG cylinders both underneath and on the roof. The lighter weight of composite CNG cylinders makes them better suited to mounting on vehicle roofs. For transit buses that have CNG cylinders mounted underneath, most incorporate piping to direct release of natural gas from over-temperature and over-pressure relief valves to exit through the roof of the vehicle. Though not common for heavy-duty vehicles, if cylinders are mounted within the body of the vehicle, the over-temperature and over-pressure relief valves must be vented to the outside of the vehicle using rigid metal tubing.

CNG Transit Bus Fleets

The AFV-FDP included 31 CNG transit buses from five transit bus properties in New York State. The transit properties were all part of the New York State CNG Bus Users Group, a consortium formed to share experience and purchase buses together in order to obtain a better price than if each transit property put out individual purchase bids. The members of the CNG Bus Users Group that purchased buses included: the Central New York Regional Transportation Authority (CENTRO) in Syracuse; the Rochester-Genesee Regional Transportation Authority (RGR) in Rochester; Long Island Bus (LIB), formerly Metropolitan Suburban Bus Authority (MSBA), serving Nassau County; the Niagara Frontier Transportation Authority (NFTA) in Buffalo; and Broome County Transit serving the Binghamton area.

After much information gathering and analysis of the options available with alternative fuel buses, the CNG Bus Users Group released a bid for purchase of CNG transit buses in 1990. Bus Industries of America (BIA) was the winning bidder. Figure 3.14 shows the BIA CNG transit bus as purchased and operated by NFTA in Buffalo. Table 3.3 lists some pertinent information about these buses. Table 3.4 lists the number of these buses acquired by each transit property.

Figure 3.14 CNG Transit Bus Operated by the Niagara Frontier Transportation Authority

Table 3.3 CNG Bus Users Group CNG Bus Information

Bus Manufacturer	Bus Industries of America
Bus Model	Orion V (with wheelchair lift) Orion I (Broome County)
Year	1992
Length	40 ft
Width	102 in. 96 in. (Broome County)
Height	11 ft, 1.5 in.
Weight	31,400 lb 30,000 lb (Broome County)
Passenger Seats	46
Engine	Cummins L10-240G, turbocharged, with oxidation catalyst
Brake Horsepower	240 @ 2100 rpm
Torque	850 ft-lb @ 1400 rpm
Governor	Woodward Digital/Analog
Transmission	ZF, Voith, or Allison (specified by individual transit properties)
Rear Axle Ratio	5.63 (ZF 4-speed/5-speed), 4.56 (Voith)
Air Conditioning	Thermo King TK-2, 7-ton capacity

Table 3.4 Orion CNG Transit Buses by Transit Property

Transit Property	Number of CNG Buses
CENTRO	8
RGR	5
LIB	10
NFTA	5
Broome County	3

The cumulative mileage and fuel usage of the 21 CNG and 21 diesel control buses operated by the five transit properties from which data were collected are illustrated in Figures 3.15 and 3.16, respectively. From January 1993 through September 1995, the diesel control buses traveled over 3.0 million miles and consumed 809,000 gallons of diesel fuel, whereas the CNG buses traveled over 2.3 million miles and consumed 615,000 diesel equivalent gallons of natural gas during the same time period.

Figure 3.15 Accumulated Miles of CNG and Diesel Control Buses

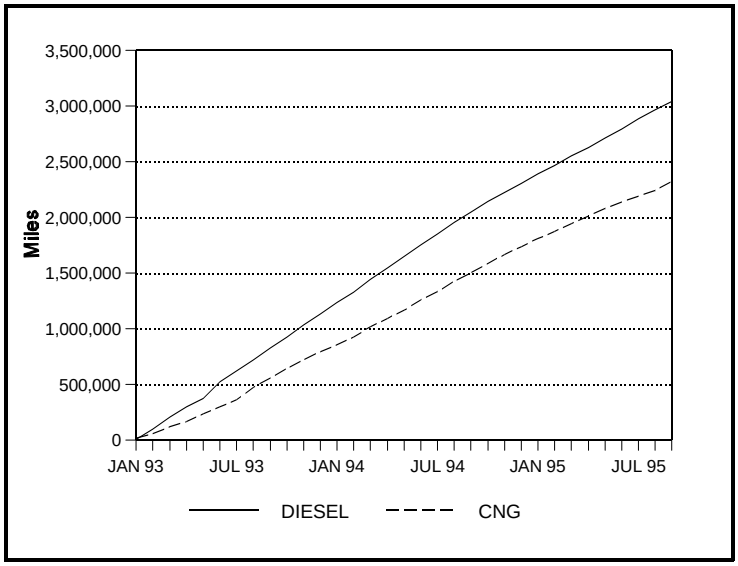

Figure 3.16 Cumulative Fuel Usage of CNG and Diesel Control Buses

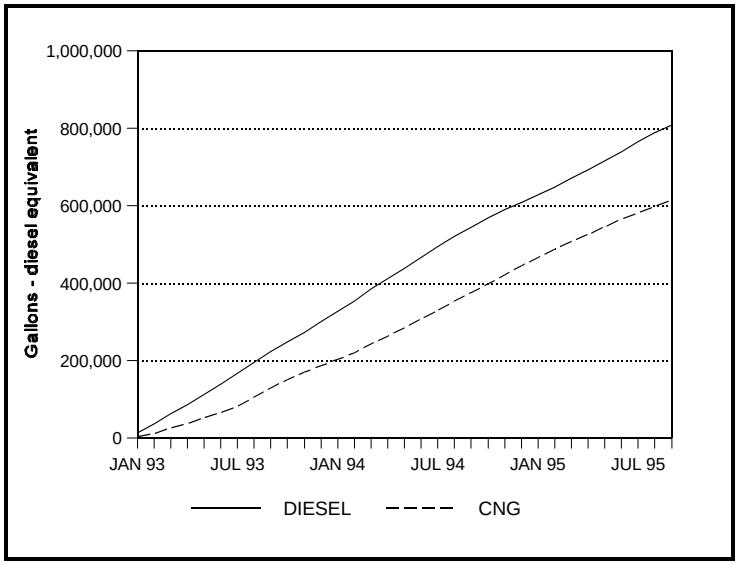

Fuel Efficiency

For heavy-duty vehicles, fuel use is an important component of the vehicle operating costs because of the large quantities of fuel consumed. As discussed previously, natural gas heavy-duty vehicles tend to be less fuel efficient than their diesel counterparts because heavy-duty natural gas engines are spark-ignition engines that are inherently less efficient than diesel engines, especially when operating under low-load conditions. This difference is important to heavy-duty vehicles such as transit buses that spend large percentages of their time idling.

Fuel economy[11] is typically expressed in units of miles per gallon (mpg). For heavy-duty vehicles, this means miles per gallon of diesel fuel. Natural gas is measured in units of standard cubic feet or therms (100,000 Btu). To properly compare the fuel economy of CNG buses to their diesel counterparts, it is necessary to calculate fuel economy in miles per diesel fuel gallon-equivalent (mpge). To accurately calculate mpge, it is necessary to know the heating content of both the natural gas and the diesel fuel used by the transit property. This is important because transit properties use two types of conventional diesel fuel, identified commercially as No. 1 and No. 2 diesel fuel. No. 1 diesel fuel is a lighter fuel than No. 2 diesel fuel, and has less energy per gallon.

To obtain accurate heating value information, the transit properties participating in the AFV-FDP requested heating value information from their natural gas suppliers (local utilities), and EA Engineering collected samples of diesel fuel for analysis of composition and heating value. Using this information, it was possible to calculate accurate fuel economy comparisons at the three transit properties that provided useable per-bus fuel economy data. Table 3.5 lists the standard cubic feet (scf) of natural gas that equals 1 gallon of diesel fuel at each of these transit properties. The number of scf of natural gas to equal 1 gallon of diesel fuel is lower for LIB and Broome County because they use No. 1 diesel fuel as compared to CENTRO that uses No. 2 diesel fuel.

Table 3.5 Equivalence Between Natural Gas and Diesel Fuel

	CENTRO	LIB	Broome County
scf of natural gas per gallon of diesel fuel	140	136	136

[11] All references to CNG bus fuel economy in this report are expressed as miles per diesel fuel gallon-equivalent, as explained herein.

The fuel economies for the CNG and diesel buses are presented in Table 3.6 and illustrated in Figure 3.17.[12] The dates of operation are the dates for which data were submitted for each group of buses. The miles traveled and gallons used are based on refueling data for which miles traveled and fuel added were provided, and not simply total miles traveled and gallons recorded during the time period.[13] The fuel economies are thus based on data known to be complete.

The miles traveled per month is presented as a measure of the type of service to which these buses were subjected. Lower miles per month suggests that the buses provided more urban-type service and thus experienced more stop-and-go operation. A breakdown of time spent at speed and the amount of idle time

Table 3.6 Fuel Economy for CNG and Diesel Buses

Transit Property and Bus Type	Dates of Operation	Number of Buses in Monitored Group	Miles per Month per Bus	Aggregate Data for Group		
				Total Miles Traveled	Total Gallons Used	mpg or mpge
CENTRO CNG	2/1/93 to 9/30/95	8	2,114	478,791	157,646	3.04
CENTRO Diesel	2/1/93 to 9/30/95	8	2,256	506,067	128,187	3.95
LIB CNG	2/1/93 to 9/30/95	10	2,793	782,011	275,869	2.84
LIB Diesel	2/1/93 to 9/30/95	10	4,602	1,123,245	328,342	3.42
Broome County CNG	2/1/93 to 9/30/95	3	2,027	175,808	48,408	3.63
Broome County Diesel	2/1/93 to 9/30/95	3	3,488	318,104	77,490	4.11

[12] RGR and NFTA bus fuel economy data were collected but were excluded from summary reports. RGR fuel economy data were excluded because of CNG bus hub odometer inaccuracies, and NFTA fuel economy data were excluded because of lack of proper fuel metering to determine individual CNG bus fuel consumption. In both cases, the data deficiencies made it impossible to accurately determine CNG bus fuel economy.

[13] The odometer readings and fuel added were submitted for each bus for each refueling. In a number of refuelings, data were missing or an obviously incorrect value was recorded. These incomplete or obviously incorrect data were not included in the fuel economy data of Table 3.6 and Figure 3.17. The total amount of data not used were fewer than 20% of all the data submitted.

Figure 3.17 Average CNG and Diesel Control Bus Fuel Economy

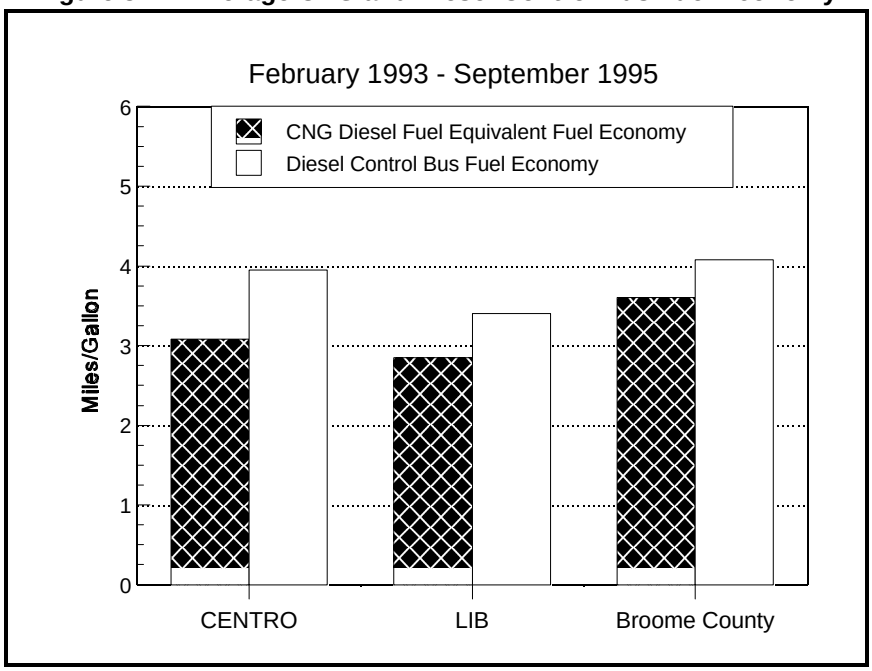

Figure 3.18 Average CNG and Diesel Control Bus Monthly Mileage

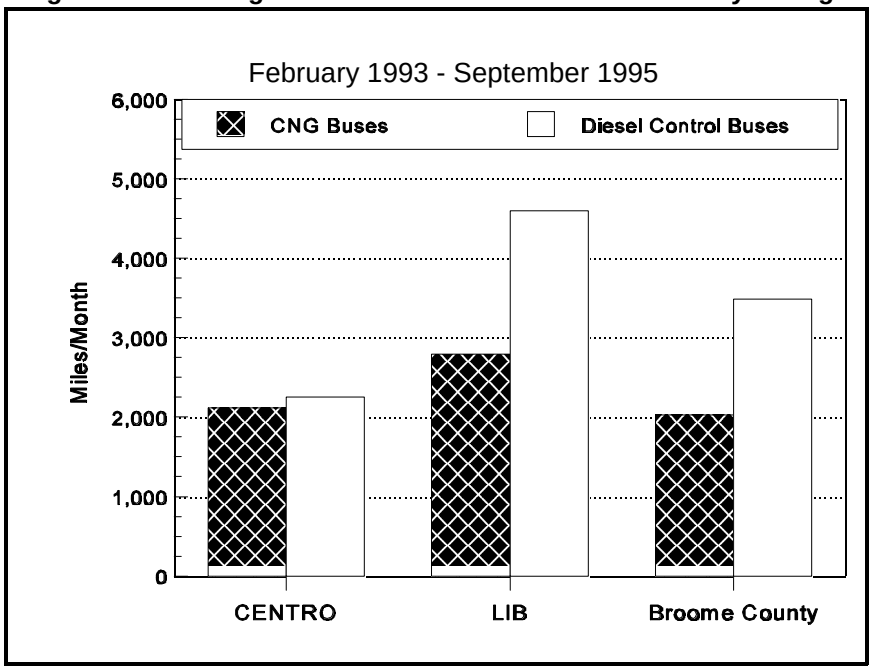

would be useful in exploring fuel economy impacts more completely, but the information was not available. Another important consideration affecting fuel economy data is that the CNG buses were stored outside, whereas the diesel buses were stored inside, because the garage facilities were not configured to accomodate CNG safety requirements. This arrangement resulted in a substantial increase in idling time for the CNG buses, compared to the diesel control buses, to warm the interior in cold weather prior to "pull-out." Each transit property selected the diesel buses for comparison to their CNG buses. Efforts were made to choose buses that used the same routes and traveled similar distances each day. The data of Table 3.6 and illustrated in Figures 3.17 and 3.18, suggest that this objective was accomplished fairly well at CENTRO.

Table 3.7 shows the ratio of CNG-to-diesel fuel economies for the three transit properties. The numbers in Table 3.7 are less than 1.00 which indicates that the fuel economy of the CNG buses is less than their diesel counterparts, i.e., the fuel economy of the CNG buses was 12% to 23% less than that of their diesel bus counterparts. The following observations help to explain these results:

- The CENTRO control buses used diesel engines (Cummins L10) that are recognized to have very good fuel economy, maximizing the difference between CNG and diesel fuel economy.
- The LIB CNG buses used a low NO_x emissions calibration which likely adversely affected fuel economy.

Table 3.7 Fuel Economy Differences by Transit Property

	CENTRO	LIB	Broome County
Ratio of CNG to Diesel mpg	0.77	0.83	0.88

Table 3.8 lists the CNG and diesel control bus drivetrain configurations specified by the five transit properties. Both CENTRO and Broome County have selected the same transmission for their CNG and diesel buses (Voith D-863/3-speed), while RGR, LIB, and NFTA selected the ZF HP590 (RGR and NFTA have 4-speed, whereas LIB has 5-speed transmissions) and Allison HT748/4-speed transmissions for their CNG and diesel buses, respectively.

Table 3.8 CNG and Diesel Control Bus Drivetrains

	Fuel	Transmission	Rear Axle Ratio
CENTRO	CNG	Voith D-863 / 3-speed	4.56
	Diesel	Voith D-863 / 3-speed	4.56
RGR	CNG	ZF HP590 / 4-speed	5.63
	Diesel	Allison HT748 / 4-speed	4.10
LIB	CNG	ZF HP590 / 5-speed	5.63
	Diesel	Allison HT748 / 4-speed	4.56
Broome County	CNG	Voith D-863 / 3-speed	4.56
	Diesel	Voith D-863 / 3-speed	4.56
NFTA	CNG	ZF HP590 / 4-speed	5.63
	Diesel	Allison HT748 / 4-speed	4.88

Fuel Operating Cost Comparison

The fuel operating cost per mile is determined by fuel price and the fuel economy of the transit buses. Table 3.9 lists the fuel operating cost for three of the transit properties. For Broome County, the fuel price represents what New York State Electric & Gas (NYSEG) is allowed to charge for selling CNG into the transportation market. This price does not include Federal, New York State, or other motor fuel taxes. (None of these diesel and natural gas prices include Federal or State tax, because transit properties are not subject to taxes.) For LIB and CENTRO, the fuel price represents what they currently pay for natural gas, plus estimated electricity cost assuming electric-motor-driven compressors, based on an unpublished study by EA Engineering for NYSERDA. However, these prices do not include any provision for repayment of the capital cost of a CNG refueling facility.

Compared to LIB, Broome County and CENTRO have significantly lower diesel fuel operating cost ($0.16/mile and $0.15/mile, respectively) because both have high fuel economy (4.11 and 3.95 mpg, respectively). Broome County and LIB have very similar natural gas fuel prices ($0.59 and $0.56 per equivalent gallon, respectively). However, the cost per mile relative to diesel fuel is quite different. For

Table 3.9 Fuel Operating Cost Per Mile

	Broome County	LIB	CENTRO
Average Diesel Bus mpg	4.11	3.42	3.95
Average Diesel Fuel Price Per Gallon	$0.65	$0.62	$0.59
Diesel Fuel Cost Per Mile	$0.16	$0.18	$0.15
Average CNG Bus mpge	3.63	2.84	3.04
Average CNG Price Per Equivalent Gal.	$0.59[1]	$0.56[2]	$0.46[3]
CNG Fuel Cost Per Mile	$0.16	$0.20	$0.15

[1] Based on $0.468/therm average for the cost of the CNG.
[2] Based on $0.49 for the cost of the natural gas and $0.07 for electrical usage and demand charges to account for the cost of compression (assuming 60 psi natural gas inlet pressure), based on prevailing electricity rates.
[3]Based on $0.39 for the cost of the natural gas and $0.07 for electrical usage and demand charges to account for the cost of compression (assuming 60 psi natural gas inlet pressure), based on prevailing electricity rates.

Broome County, their CNG buses cost about the same ($0.16/mile) as their diesel fuel buses. LIB CNG bus fuel operating costs are $0.02 per mile more than their diesel counterparts primarily because of CNG's lower fuel economy. CENTRO has the lowest CNG bus fuel operating costs, which is primarily the result of their low cost of natural gas.[14] Even though the CENTRO CNG buses have lower fuel economy than their diesel counterparts, the fuel cost per mile is the same. CENTRO believes that if they were using natural gas to fuel all their buses, the increase in natural gas volume would allow a further 10% decrease in natural gas cost before compression.

Acceleration Performance

During June 1995, acceleration performance tests were conducted on two CNG and two diesel transit buses from NFTA at Buffalo Park. Table 3.10 lists the average acceleration performance test results from 0-20 mph and 0-40 mph for both sets of buses. The NFTA CNG buses have the ZF HP590 4-speed transmission, while the 6V-92TA and Series 50 diesel buses have the Allison VR731 and ZF HP590 transmissions, respectively. As illustrated in Figure 3.19, the average acceleration performance of the CNG buses, when compared to the DDC 6V-92TA diesel bus, was nearly the same up to 20 mph; however, from 20 to 40 mph the CNG buses

[14] CENTRO has an arrangement to purchase "transport" natural gas for all their natural gas uses onsite. Transport natural gas is bought from a supplier and not directly from the local utility. The local utility does charge a transportation fee for delivering the gas, hence the name transport gas. Transport gas is typically less expensive than natural gas purchased from local utilities, but the transit property must expend the effort to find a supplier and develop a contract for purchase. Each transit property would need to determine whether transport gas is a viable option for them.

were about three seconds slower. Considering the CNG buses weigh about 3,000 pounds more than the diesel buses, it appears the CNG bus powertrain was designed for improved low speed acceleration performance. However, the average acceleration performance of the CNG buses, when compared with the DDC Series 50 (four-cylinders/four-stroke) bus, was nearly two seconds faster up to 20 mph and seven seconds faster up to 40 mph. Clearly, the diesel bus with the DDC Series 50 engine was significantly better in acceleration performance than both the CNG buses and the diesel bus with the DDC 6V-92TA engine.

Table 3.10 CNG and Diesel Bus Acceleration Performance Test Results

Bus	Fuel	Body	Engine	Transmission	Weight, lb	0-20 mph, sec	0-40 mph, sec
502	CNG	Orion V	Cummins L10-240G	ZF HP590 4-speed	31,140	8.04	26.63
504	CNG	Orion V	Cummins L10-240G	ZF HP590 4-speed	31,200	8.41	26.4
9360	Diesel	New Flyer	DDC 6V-92TA	Allison VR731 5-speed	28,410	8.01	23.18
9363	Diesel	New Flyer	DDC Series 50	ZF HP590 5-speed	28,680	6.39	19.43

Maintenance

A basic maintenance task created by introduction of CNG buses consists of periodic inspections to find any natural gas leaks too small to be detected during normal operation and routine daily inspections. In addition, the CNG buses monitored in the AFV-FDP had several unique subsystems that create new and different maintenance requirements. These subsystems include:

- High-pressure natural gas storage cylinders with pressure relief valves (PRVs)
- High-pressure natural gas lines and pressure regulators
- Engine ignition system
- Turbocharging system with manual condensate drain.

Figure 3.19 Average CNG and Diesel Control Bus Acceleration Performance

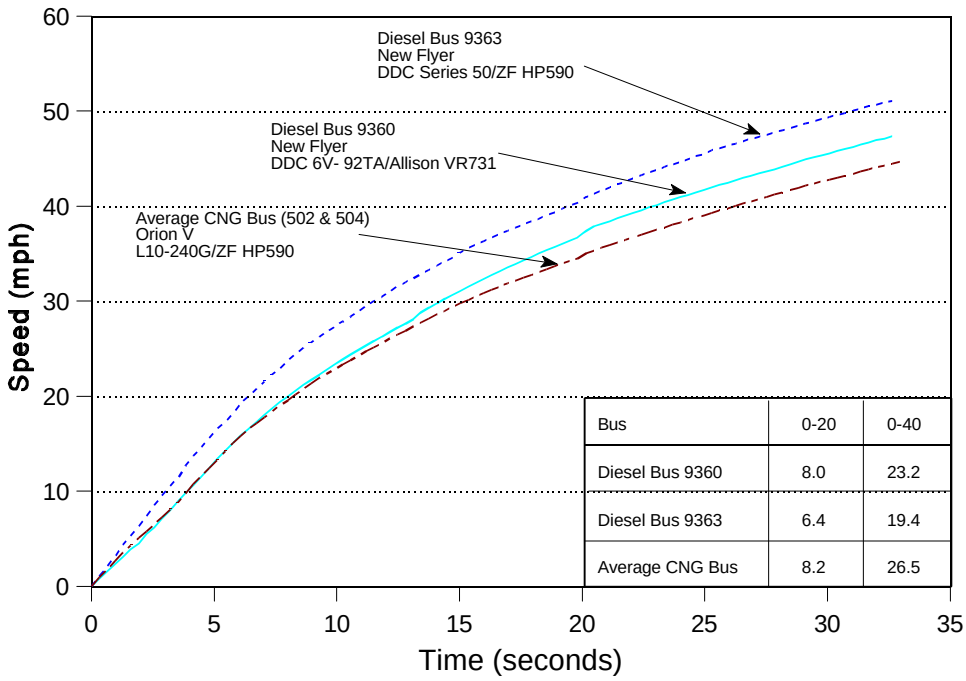

Bus	0-20	0-40
Diesel Bus 9360	8.0	23.2
Diesel Bus 9363	6.4	19.4
Average CNG Bus	8.2	26.5

NOTE: The diesel buses have an average weight of 28,550 lb., while the CNG buses have an average weight of 31,200 lb.

The PRVs on these buses protect the cylinders from both overpressure and overtemperature, and do not require periodic preventative maintenance, but several of them have released prematurely. The actual cause was not determined, but vibrations, temperature changes, and the presence of moisture in the vent line (with subsequent freezing) have all been implicated in premature releases. Of all the releases that have been experienced, none are believed to be due to cylinder overpressure. The poor reliability of these PRVs has caused much additional maintenance expense in terms of labor for replacement, and has undermined the safety value of the PRVs. PRV manufacturers have developed new designs to overcome these problems.[15]

For the engine to operate properly and reliably, the pressure of the natural gas at the inlet of the engine fuel system must be within the specified range. It is an important part of preventative maintenance that this pressure be checked. The time required to check system pressure is estimated to represent an insignificant impact on overall preventative maintenance time for CNG buses relative to diesel buses.

[15] CENTRO has replaced their original PRVs with newly designed PRVs manufactured by Mirada Controls because of the large amount of maintenance the PRVs incurred.

The ignition systems on these buses represent a significant additional maintenance expense relative to similar diesel fuel injection systems. Spark plug life and spark plug wire failures have been problematic in part because of the high energy ignition system needed to ignite natural gas under lean conditions. Early in the life of the CNG buses, spark plug life was as short as 3,000 miles, while the current reported life using improved versions is 12,000 to 18,000 miles. Each spark plug costs $28. This price is relatively high and probably is a result of the spark plug being unique to this engine; development costs and other overhead costs are high relative to current production volumes. Two hours has been estimated as a typical amount of labor for a change of spark plugs. Thus, each change of six spark plugs costs $168 in parts plus two hours of labor, estimated to be $80 assuming a fully-burdened cost per hour of $40. Spark plug wires are even more costly. A complete set of six wires costs $700. Because of their high cost, when a failure occurs only the individual wire that failed is replaced (each wire has its own unique price and is sold individually), instead of replacing the whole set.

Cummins has recognized these problems and has developed advanced ignition systems that should have longer service lives and should be more reliable. For example, currently Cummins offers three versions of their L10 natural gas engine, the L10-240G, L10-260G, and the L10-300G, which offer many improvements from the L10-240G engine used by the New York State CNG Bus Users Group, such as improved closed-loop air/fuel control and turbochargers with closed-loop electronic wastegate control. Their goal is to eventually eliminate the spark plug wires by mounting the ignition coils (there is one for each cylinder) directly onto the spark plugs. Cummins has already achieved this goal with their 8.3-liter natural gas engine.[16] Thus, future Cummins natural gas engines should have less costly and more reliable ignition systems through elimination of the spark plug wires, as well as other improvements engendered by field experience that Cummins has acquired through demonstration projects in New York State and elsewhere.

The Cummins L10-240G engine uses exhaust gas pressure to operate the wastegate of the turbocharger. (Precise control of turbocharger boost pressure is essential to reliable long life of turbocharged spark ignition engines.) As a consequence, the line from the exhaust system to the wastegate controller is hot at one end and cool at the other, which causes condensation of water that must be removed by manually opening a drain valve. This operation should be performed every day.

Many natural gas compressors at CNG fueling stations allow oil to pass their compression rings and be carried along with the compressed natural gas. This blow-by oil tends to accumulate in the vehicle CNG fuel system.

---

[16] The B5.9G Gas Engine Technology, Mostafa M. Kamel, Cummins Engine Company, Inc., SAE Paper 952649, International Truck & Bus Meeting & Exposition, Winston-Salem, North Carolina, November 13-15, 1995.

Blow-by oil often collects in the pressure regulators and can cause them to malfunction. To prevent this, it has been recommended that the CNG fuel system pressure regulators be drained of any blow-by oil at least annually.

Maintenance Cost Comparison

To compare maintenance costs among the transit properties, the ratio of maintenance costs between the CNG buses and their diesel control buses was determined. Listed in Table 3.11 are the transit property parts, labor, and total maintenance cost ratios expressed per bus and per mile, from February 1993 through September 1995, for the CNG buses as compared to their diesel control buses. The maintenance cost ratio equals the CNG bus maintenance costs divided by the diesel bus maintenance costs. Therefore, a ratio less than 1.00 indicates a CNG bus maintenance cost less than that of the diesel control buses, whereas a ratio of more than 1.00 indicates a CNG bus maintenance cost more than that of the diesel control buses.

On average, the CNG buses incurred 73% of the parts cost and 91% of the labor cost per bus compared to the diesel control buses. Overall, the CNG buses incurred 83% of the total maintenance cost per bus compared to the diesel control buses. While the variation among transit properties was significant, all participants indicated less parts, labor, and total maintenance cost per bus for the CNG buses than for the diesel control buses, with the exception of labor cost per bus for CENTRO, which was essentially the same. This CNG bus cost advantage is likely because, in almost all cases, the CNG buses are newer than the buses they are being compared to and because Cummins had performed engine repairs under warranty. CENTRO had experienced more repairs per bus to replace the PRVs, spark plugs/wires, and solenoid valves on their CNG buses than the other three transit properties, which may explain why CENTRO's labor cost ratio per bus was the highest among the transit properties. However, even with these additional CNG fuel system costs, CENTRO's labor cost per bus was essentially the same as the diesel buses. The CNG buses at RGR had 62% of the parts, labor, and total maintenance cost per bus, compared to their diesel control buses, and these ratios are significantly lower than those of the other properties. This large CNG advantage may be explained upon further examination of RGR's bus maintenance history indicating significant preventative maintenance costs on the wheel chair lifts of the Gillig Phantom diesel control buses, as well as the CNG buses generally having significantly less preventative maintenance costs compared to the diesel buses. Therefore, the maintenance cost ratios per bus at RGR are exceptionally low due to significant differences in preventative maintenance between the CNG and diesel buses.

Table 3.11 CNG and Diesel Control Bus Maintenance Cost Comparison

		$/Bus Ratio[1]	Miles/Bus Ratio[2]	$/Mile Ratio[3]
CENTRO	Parts	0.75		0.82
	Labor	1.01		1.11
	Total	0.94	0.91	1.03
RGR	Parts	0.62		0.57
	Labor	0.62		0.57
	Total	0.62	1.08	0.57
LIB	Parts	0.84		1.31
	Labor	0.89		1.39
	Total	0.87	0.64	1.36
Broome County	Parts	0.56		0.99
	Labor	0.89		1.58
	Total	0.69	0.56	1.22
TOTAL	Parts	0.73		0.97
	Labor	0.91		1.21
	Total	0.83	0.76	1.10

[1] CNG bus maintenance costs ($/bus) divided by diesel control bus maintenance costs.
[2] CNG bus miles (miles/bus) divided by diesel control bus miles.
[3] Ratio of C to D, where C is CNG bus maintenance costs ($/bus) divided by bus miles (miles/bus), and D is diesel control bus maintenance costs divided by bus miles. Therefore, a ratio less than 1.00 indicates CNG bus maintenance cost per mile less than that of the diesel control buses, whereas a ratio of more than 1.00 indicates CNG bus maintenance cost per mile more than that of the diesel control buses.

In comparing the ratio of maintenance costs per mile, the CNG buses on average had essentially the same parts cost, while the labor cost was about 20% more, compared to the diesel control buses. Overall, the CNG buses had 10% more total maintenance cost per mile compared to the diesel control buses. While the variation among transit properties was significant, RGR indicated significantly less total maintenance cost per mile; CENTRO indicated essentially the same; while LIB and Broome County indicated more total maintenance cost per mile for their CNG buses compared with their diesel control buses. This variation is likely because the LIB and Broome County CNG buses traveled significantly less than their diesel control buses (indicated by the miles/bus ratio less than 1.00), while the CNG buses at CENTRO and RGR traveled about the same as the diesel control buses (indicated by the miles/bus ratio close to 1.00). CNG buses at RGR had 57% of the parts, labor, and total maintenance cost per mile compared to the diesel control buses, significantly lower than the cost ratios at the other properties. As explained previously, this was due to significantly more preventative maintenance costs on the wheel chair lifts of the diesel control buses, as well as generally lower preventative maintenance costs for the CNG buses compared to the diesel buses. Also, since the RGR CNG buses traveled

relatively more miles than those of the other transit properties (indicated by the largest miles/bus ratio), this further contributed to the low $/mile ratio for RGR.

Major engine, turbocharger, and transmission failures occurred among the CNG and diesel buses during the monitoring period, and these failures caused significant maintenance expense. Table 3.12 lists the number of known engine, turbocharger, and transmission/differential failures from February 1993 through September 1995. There does not appear to be a significant difference in the number of engine failures between the CNG and diesel control buses at each of the four transit properties. While the CNG buses are one year newer than the diesel control buses, with the exception of the Broome County CNG buses which are five years newer, this difference does not appear to have an effect in the difference of engine failures between the CNG and diesel buses. However, it is evident that the CNG buses had significantly more turbocharger failures than the diesel control buses at each transit property. Most of these turbocharger failures appear to have been the result of damaged vanes/blades at the intake wheel. The CNG buses at RGR and LIB had slightly more ZF HP590 transmission failures than their diesel control buses with the Allison HT748 transmission. The CNG buses at CENTRO and Broome County had less Voith D-863 transmission failures than their diesel control buses with the same transmission. However, because there are many factors that can contribute to these major failures and it was beyond the scope of this study, it was not possible to determine with certainty whether there was a statistically significant difference in major engine, turbocharger, and transmission/differential failures for CNG buses compared to the diesel control buses.

Table 3.12 Major Engine, Turbo, and Transmission/Differential Failures by Transit Property

	CENTRO		RGR		LIB		Broome County	
	CNG	Diesel	CNG	Diesel	CNG	Diesel	CNG	Diesel
Engine Failures	1[1]	0	0	1[2]	2[3]	2	1[4]	1
Turbo Failures	6	2	1	0	4	0	5	0
Trans./Diff. Failures	1/1	3/1	3[5]	0	2	1	0	1

[1] Engine had a broken valve.
[2] Engine leaked oil and was overhauled.
[3] One engine had a connecting rod bearing break and one engine had a broken crankshaft.
[4] Engine had water in oil. Under warranty, Cummins replaced two cylinder kits, connecting rod/main bearings, cylinder head, turbo and center section of exhaust manifold.
[5] Transmissions slipped and were rebuilt. One transmission was rebuilt again because of slipping six months later.

Table 3.13 Maintenance Unique to CNG Buses, Cost per Bus

Maintenance Item	Hours	Parts	Times per Year	Hours per Year	Labor per Year[1]	Parts per Year	Total per Year
Leak Checks	4	$0	4	16	$640	$0	$640
Spark Plugs	2	$168	6	12	$480	$1,008	$1,488
Spark Plug Wires	1	$116[2]	12	12	$480	$1,392	$1,872
Totals Per Year	NA[3]	NA	NA	40	$1,600	$2,400	$4,000

[1] Assuming $40 per hour fully-burdened labor cost.
[2] Based on $700 per set.
[3] Not applicable.

Estimates of the cost of maintenance items unique to CNG buses are presented in Table 3.13. Shown are the additional maintenance costs of leak detection, spark plug replacement, and spark plug wire replacement.

For leak checks it was assumed that four hours would be required for each leak check, and that leak checks would be performed four times per year. Spark plugs were assumed to be replaced six times per year and that they would be replaced at regular maintenance intervals, each replacement requiring two hours of labor. Spark plug wires are very expensive, so it was assumed that wires would only be replaced as they failed. It was assumed that 12 wires (the equivalent of two complete sets of wires) would be replaced each year and that replacing each wire would require one hour of labor.

As Table 3.13 illustrates, these maintenance items require an estimated total of 40 hours per bus per year to complete, with a corresponding estimated labor cost of $1,600 and an estimated parts cost of $2,400. If the bus travels 50,000 miles per year, this amounts to a cost of $0.08 per mile, and $0.10 per mile if the bus travels 40,000 miles per year.

Cummins and other manufacturers have been making substantial improvements in the reliability of natural gas engines. Based on development efforts by natural gas engine manufacturers, it is likely that ignition wires will be eliminated, spark plugs will last at least 12,000 miles, and the price of spark plugs will

Table 3.14 Maintenance Unique to CNG Buses, Estimated Cost per Bus after Engine Improvements [1]

Maintenance Item	Hours	Parts	Times per Year	Hours per Year	Labor per Year[2]	Parts per Year	Total per Year
Leak Checks	4	$0	4	16	$640	$0	$640
Spark Plugs	2	$84	4	8	$320	$336	$656
Totals Per Year	NA[3]	NA	NA	24	$960	$336	$1,296

[1] Assumes elimination of spark plug wires.
[2] Assuming $40 per hour fully-burdened labor cost.
[3] Not applicable.

decrease ($14 each will be assumed[17]). The requirement for leak checks will remain. Table 3.14 lists maintenance costs projected on the basis of current and anticipated improvements in CNG technology.

A decrease of 16 hours per bus per year is estimated for maintenance labor, with a corresponding drop in labor cost of $640. Parts costs decrease dramatically from $2,400 to $336 because of the elimination of spark plug wires and introduction of more durable spark plugs. The cost per mile for these items unique to CNG buses drops to about $0.03, assuming either 40,000 or 50,000 miles per year.

Brake Lining Life

Another important maintenance expense, when comparing CNG buses to diesel buses, is the cost of replacing brake linings. From the experience gathered, it appears that the CNG buses monitored in the AFV-FDP had brake lining life in the range of 15,000 to 23,000 miles. Similar diesel bus brake lining life was much more variable, ranging from 15,000 to 40,000 miles. Listed in Table 3.15 is the ratio of brake lining replacements of the CNG buses compared with the diesel control buses. Shown is CNG bus brake lining replacements per 100,000 miles divided by the number of diesel control bus brake lining replacements per 100,000 miles. Therefore, a ratio greater than 1.00 indicates less CNG bus brake lining life than the diesel control buses, whereas a ratio of less than 1.00 indicates more CNG bus brake lining life than the diesel control buses. While the CNG buses weigh about 10% more than the diesel control buses, leading one to expect a decrease in brake lining life, the CNG buses at RGR and LIB equipped with the ZF HP590 transmission appear to have about 10% more brake lining life than their diesel control buses equipped with the Allison HT748 transmission. The

[17] Assuming classical volume production economics, a price reduction of one-half corresponds to five doublings in production volume. Given that there are currently between 300 and 400 Cummins L10-240G engines in service and the assumption that spark plug life will increase, 10,000 vehicles (trucks and buses) using Cummins L10-240G engines would need to be in service in order for spark plug demand to double five times.

CNG buses at CENTRO and Broome County equipped with the Voith D-863 transmission appear to have from 7 to 13% less brake lining life than diesel control buses equipped with the same transmission. Various factors contribute to brake lining life, such as route type (e.g., urban/express/rural), bus loaded weight, sensitivity of brake lining contact when brakes are applied, uneven brake application (e.g., front brakes contact before rear brakes), and transmission retard. These factors are highly variable and were not quantified in this study. It was not possible to determine with certainty whether there was a difference in brake lining life for CNG buses compared to the diesel buses.

Table 3.15 CNG and Diesel Control Bus Brake Lining Replacement Comparison

	Replacements per 100,000 Miles, CNG/Diesel Ratio[1]	Ratio of Brake Lining Life, CNG versus Diesel[2]
CENTRO	1.15	0.87
RGR	0.92	1.09
LIB	0.91	1.10
Broome County	1.08	0.93

[1] CNG bus brake lining replacements per 100,000 miles divided by diesel control bus brake lining replacements per 100,000 miles. Therefore, a ratio greater than 1.00 indicates less CNG bus brake lining life than the diesel control buses, whereas a ratio less than 1.00 indicates more CNG bus brake lining life than the diesel control buses.
[2] Reciprocal of numbers to left.

According to personnel at LIB, CENTRO, and Broome County, the transmission retard level was not adjusted from the manufacturer's setting during the demonstration program and was the same for the CNG and diesel control buses. According to technical contacts at Voith and ZF Industries, Inc., the transmission retard level is adjustable and the transit properties have the option of increasing the transmission retard in order to offset the increased weight disadvantage of the CNG buses, thereby increasing the brake lining life. Also, they indicated that transmission retard varies according to the amount of force applied to the brakes (e.g., a slight push on the brake pedal initiates retard, whereas full braking engages retard fully).

According to ZF Industries, Inc., the increased brake lining life of the buses with the ZF, compared to the Voith transmission, is due to differences in the operation of the ZF retarder versus the Voith retarder. The ZF transmission has an input retarder, whereas the Voith transmission has an output retarder. The Voith transmission creates braking torque by counter-rotating the hydrodynamic torque converter, thus it operates as

an axial pump, which delivers oil to the stalled pump impeller and the stator.[18] However, the ZF hydrodynamic retarder is of input design, located between the transmission converter and the planetary gear system. Because the retarder gains rotor speed through the planetary drive, braking forces are therefore directly dependent on the gear engaged, so that full braking power is still available in the low speed range. According to ZF Industries, Inc., "The ZF-ECOMAT Integral Hydraulic Input Retarder lowers maintenance costs by extending brake lining life up to three times."[19]

Emissions

Only the LIB CNG buses were tested for emissions because of a scarcity of facilities capable of testing heavy-duty vehicles and because LIB's base is conveniently close to the New York City Department of Environmental Protection (NYCDEP) Frost Street Vehicle Emission Test Laboratory. Engine configuration and bus weight are major variables that affect bus emissions, but the CNG buses operated by transit properties other than LIB, and that use different transmissions, are likely to have very similar emissions over the same driving cycles. Therefore, the emissions results from the LIB CNG buses should be representative of the emissions of all the CNG Bus Users Group buses. However, the equipment at the NYCDEP Frost Street lab cannot be programmed with the full inertia weights of the 40-foot (40,000-lb GVW) and 25-foot (24,000-lb GVW) buses tested. These buses were all tested at a lower inertia weight (19,500 lb), which biases the emissions test results lower than would probably be obtained at higher inertial weights; however, these emissions test results can still be used for comparisons with diesel test results obtained at the same 19,500-lb inertial test weight.

Three rounds of emissions tests were conducted starting in August 1993, followed by repeats in May 1994, and August 1995. Table 3.16 lists the buses tested and their accumulated mileages at the time of testing. Before emissions testing was initiated in 1993, the calibration of the engine management system of five of LIB's ten CNG buses (661, 662, 663, 664, and 665) was upgraded to that used for California engines, which resulted in more torque (850 ft-lb versus 750 ft-lb) and lower oxides of nitrogen (NO_x) emissions. In addition to engine management software changes, the updated buses also had Tescom high-pressure regulators in place of the original IMPCO high-pressure regulators. One of the buses (659) could not be tested in 1993 because of transmission problems during the emissions test period. All ten of the CNG buses at LIB had been upgraded with the foregoing modifications before the second round of testing in 1994.

---

[18] "The Perfect City Bus Transmissions - DIWA® 3rd generation" brochure provided by Robert Wiss, Manager - Technical Sales Bus Transmissions, Voith Transmission, Inc., York, Pennsylvania.

[19] "ZF-ECOMAT - Integral Hydraulic Input Retarder" brochure provided by Warren Anderson, Service Engineer, Heavy Duty On-Highway Products, ZF Industries, Inc., Vernon Hills, Illinois.

Table 3.16 CNG and Diesel Buses Tested for Emissions

Bus	Group	Engine	Transmission	Miles at Time of Tests
657	CNG	Cummins L10	ZF HP590	6,649; 33,396; 63,324
658	CNG	Cummins L10	ZF HP590	16,962; 46,827; 97,576
659	CNG	Cummins L10	ZF HP590	32,858; 83,104
660	CNG	Cummins L10	ZF HP590	16,976; 40,342; 84,401
661	CNG	Cummins L10	ZF HP590	15,298; 40,457
662	CNG	Cummins L10	ZF HP590	17,659; 46,501; 90,464
663	CNG	Cummins L10	ZF HP590	16,789; 36,468; 80,772
664	CNG	Cummins L10	ZF HP590	13,869; 42,316; 55,447
665	CNG	Cummins L10	ZF HP590	17,036; 43,762
666	CNG	Cummins L10	ZF HP590	14,624; 46,771
624	Diesel Baseline	DDC 6V-92TA	Allison HT740	102,256; 150,169
615	Diesel Baseline	DDC 6V-92TA	Allison HT740	101,384; 191,222
8005	Diesel with Trap	DDC 6V-92TA	3-speed[1]	48
8350	Diesel with Trap	DDC 6V-92TA	3-speed	16,132
8015	Diesel with Trap	DDC 6V-92TA	3-speed	41,236
8223	Diesel with Trap	DDC 6V-92TA	3-speed	74
5900	Hybrid CNG/Battery	GM 4.3L	Automatic[1]	1,129; 2,897

[1] Manufacturer not determined.

The Cummins L10 engines in the CNG buses are operated lean, meaning that more air is admitted into the combustion chamber than is theoretically needed to complete combustion. Lean-burn engines tend to have very low carbon monoxide (CO) emissions, low NO_x emissions, and high unburned hydrocarbon (HC) emissions. High HC emissions seem illogical, but they result from small pockets of air/fuel mixture too lean to combust. To counteract this characteristic of lean-burn engines, Cummins has added an oxidation catalyst to this engine. The oxidation catalyst lowers HC emissions somewhat but it is not as effective as for other fuels because methane (the primary constituent of natural gas) is difficult to oxidize with high efficiency at engine exhaust temperatures.

Two diesel buses were emissions tested as a baseline for comparison to the emissions performance of many existing buses in transit property fleets. The two diesel control buses were 1991 Orion V 40-foot transit buses with DDC 6V-92TA engines and Allison four-speed automatic transmissions.

Emissions data from four New York City 1990 TMC 40-foot transit buses with DDC 6V-92TA diesel engines with Donaldson particulate traps were included for comparison purposes. These particulate traps were part of an experimental program and are not commercially available.

Also included for comparison were emissions data from one New York City 1993 Orion II 25-foot CNG-fueled hybrid electric transit bus with a GM 4.3-liter engine. This bus was a prototype developed with NYSERDA support and emissions tested at the NYCDEP Frost Street lab on June 5 and October 10, 1995.

The emissions tests consist of operating the buses on a chassis dynamometer over prescribed driving cycles. The driving cycles used for emissions testing included the CBD-15, NYBUS, and NYBUS Composite (NYBC or NYB Composite). The CBD-15 cycle has an average speed of 12.37 mph and is composed of 15 repetitions of a simple start-and-stop sequence. The NYBUS cycle has an average speed of 3.89 mph and is representative of transit bus operation in a congested urban setting. The NYB Composite cycle has an average speed of 8.77 mph and is considered the most representative of bus operation in New York State. It was decided to use the NYB Composite cycle as the basis of comparison for this report. The other two cycles have very similar relative emissions results though the absolute values vary widely. Of all these cycles, the NYBUS cycle tends to result in the highest emissions when expressed in grams per mile (gm/mile).

Figure 3.20 illustrates the differences in HC emissions among these buses. This figure presents the emissions results for the NYB Composite driving cycle in the form of floating bars with the top of the bar representing the maximum, the bottom of the bar representing the minimum and the line inside indicating the average of the emissions sampled. These averages are calculated from the three rounds of emissions data (1993, 1994, and 1995). In 1993, the CNG buses had higher total average HC emissions (approximately 2.5 times higher) than the baseline diesel buses, but the vast majority of these HCs are methane, which is relatively non-reactive and therefore contributes little to ground-level ozone formation. The CNG buses tested in 1994 showed a large increase in average HC emissions, nearly two times those tested in 1993. However, average non-methane hydrocarbon (NMHC) emissions, while increased about 2.5 times from 1993 to 1994, were still less than half those of the diesel buses. Also, the average NMHC emissions of the CNG buses tested in 1995 were equal to only about 60% of the Orion II Hybrid bus emissions. The trap buses tended to have HC emissions slightly

Figure 3.20 Unburned Hydrocarbon Emissions - NYB Composite Test Cycle

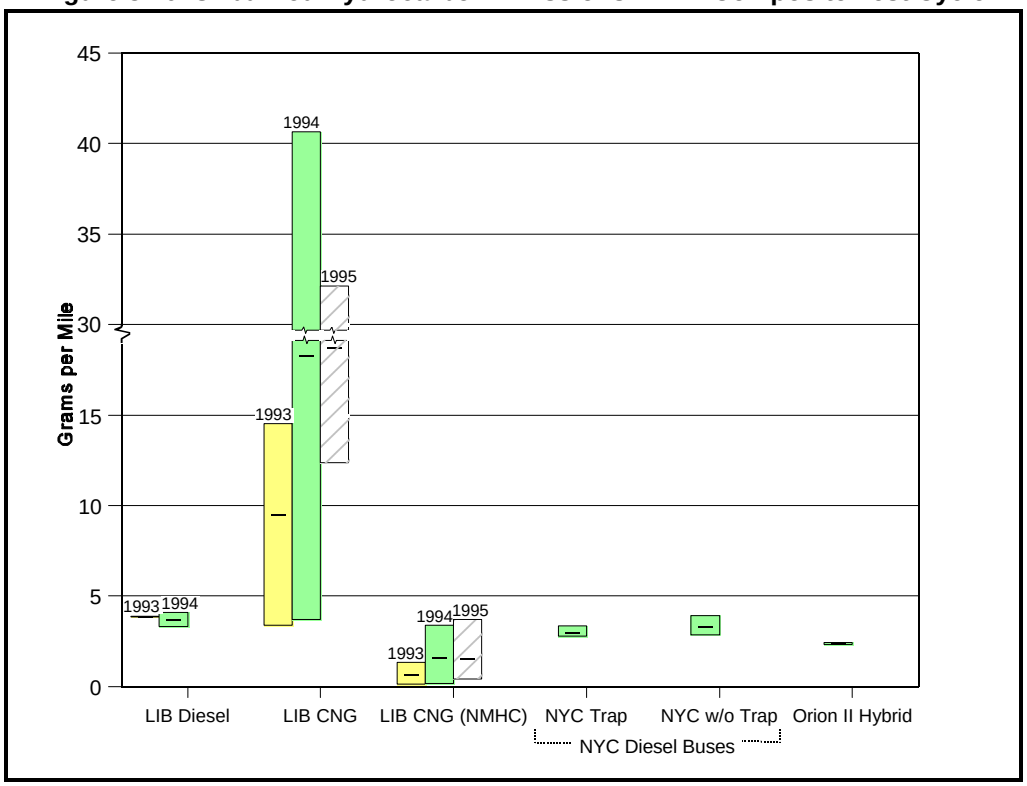

lower than those of the diesel baseline buses. These lower numbers could be because traps tend to cause a small amount of HC oxidation to occur in addition to collection of particulate matter. The Orion II Hybrid bus had average HC emissions that were significantly less than the LIB CNG buses and equal to about 65% of the diesel control bus emissions.

Figure 3.21 illustrates the differences in CO emissions among these buses. The CNG buses tested in 1993 and 1995 had very low CO emissions, characteristic of lean-burn engines. However, the CNG buses tested in 1994 had average CO emissions over 10 times higher than in 1993 and 1995. Of the ten CNG buses tested in 1994, three had very high CO emissions (657, 660, and 664), which contributed to the excessively high average CO emissions in 1994. Bus 657 had a mechanically governed engine and had CO emissions as high as 144.1 gm/mile. Cummins replaced the carburetor and this bus was retested, yielding CO emissions of 5.6 gm/mile. Bus 660 had an electronically governed engine and had CO emissions as high as 87.9 gm/mile. Cummins made fuel system changes including shimming the fuel regulator so proper air/fuel ratio could be achieved. The bus was retested and yielded CO emissions of 0.35 gm/mile. Bus 664 had an electronically governed engine and was tested in 1994 and had CO emissions of 197.7 gm/mile. A new catalyst was installed and the air/fuel ratio was adjusted to specifications. The bus was retested and yielded CO emissions even higher, 344 gm/mile. After this retest, Cummins installed a new carburetor and again adjusted the air/fuel ratio to

Figure 3.21 Carbon Monoxide Emissions - NYB Composite Test Cycle

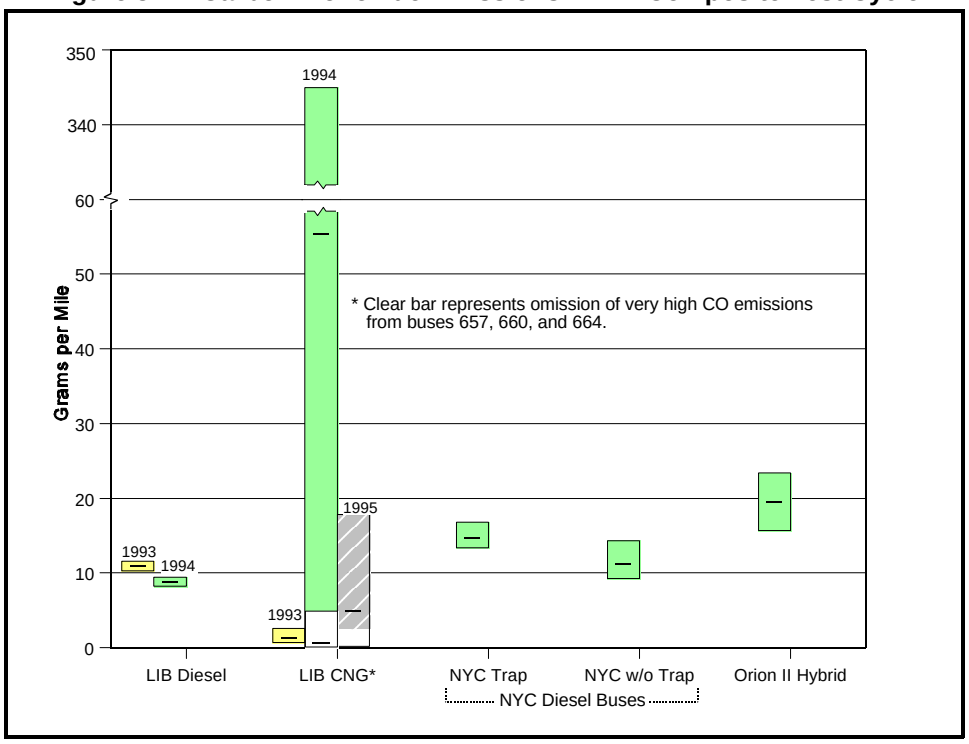

specifications. The second retest yielded CO emissions of 0.01 gm/mile. The average CO emissions of the group of CNG buses tested in 1994 decreases significantly when the very high CO emissions from buses 657, 660, and 664 are omitted.

In Figure 3.21, the clear portion of the bar for CNG emissions in 1994 does not include the high CO emissions due to engine misadjustments from these three buses. Not including the high CO emissions due to engine misadjustments, the revised average CO emissions were lower than the average 1993 emissions by 40%. While the three CNG buses determined to have high CO emissions were discovered to have misadjustments, this was only learned from emissions testing. LIB had followed Cummins maintenance procedures for these buses and did not notice anything out of the ordinary that would have revealed a problem with high CO emissions.

The buses with particulate traps were found to have slightly higher CO emissions than the baseline diesel buses. This higher number could be caused by HCs oxidized in the particulate trap, creating CO emissions in addition to those produced by the engine. This supposition is supported by these data that show higher CO emissions for the trap buses when using the traps compared to not using the traps. The Orion II Hybrid bus had average CO emissions about four times higher than the LIB CNG buses tested in 1995, and about twice the CO emissions of diesel control buses tested in 1993 and 1994. This result is indicative of this vehicle's

Figure 3.22 Oxides of Nitrogen Emissions - NYB Composite Test Cycle

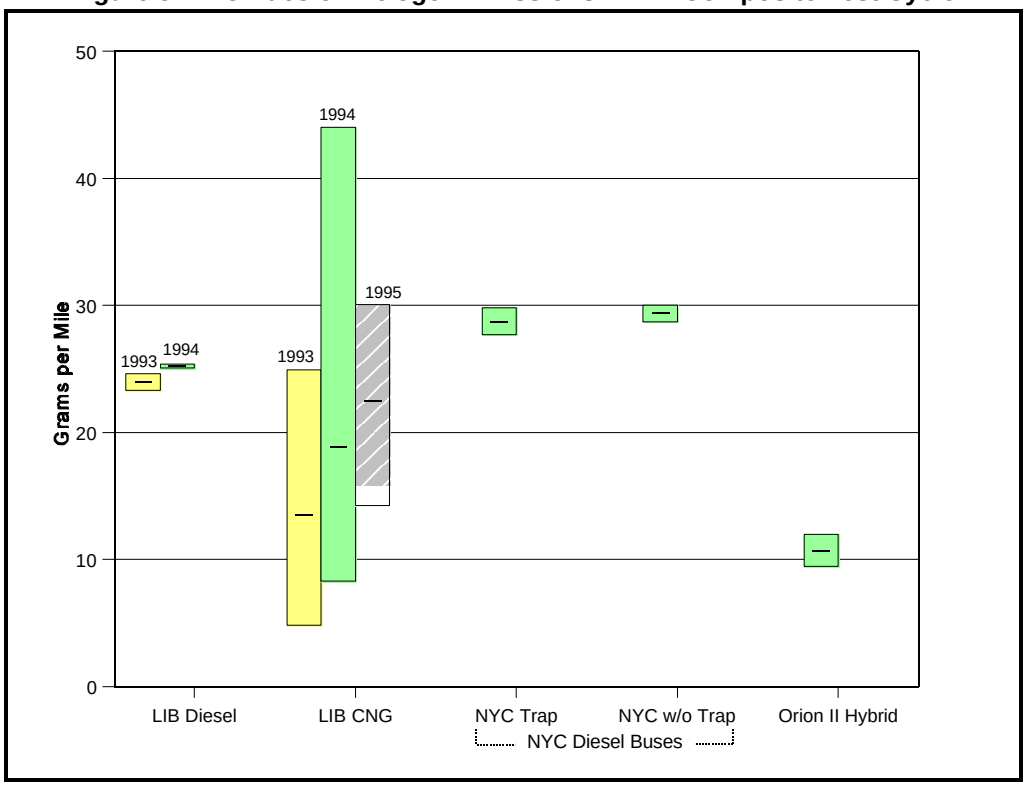

prototype status; a mature design employing the technology in this vehicle should produce significantly lower readings in all emissions categories, as compared to any technology tested in this program.

Figure 3.22 illustrates the differences in NO_x emissions among these buses. The CNG buses tested in 1993 had about half of the baseline diesel average NO_x emissions, but from 1993 to 1995 the CNG bus average NO_x emissions increased by 67%. However, the 1995 CNG bus average NO_x emissions were still 6% below the baseline diesel average NO_x emissions. The Cummins L10 natural gas engine operates lean, which is how it achieves low NO_x emissions. Also, since the lean-burn engine operates close to both the knock limit and the lean ignition limit, it requires very close control of the air/fuel ratio and spark timing. The increase in average NO_x emissions from 1993 to 1995 is probably an indication of the CNG engine gradually operating richer because of a lack of close control of the air/fuel mixture. This deficiency is being addressed in later versions of the L10 natural gas engine, which incorporate improved controls. As expected, traps have insignificant impact on NO_x emissions (comparing trap to non-trap operation). The Orion II Hybrid bus had average NO_x emissions 20% lower than the lowest average LIB CNG buses and about 2.5 times lower than the diesel control buses. The average NO_x emissions from the Orion II Hybrid bus are considerably less than the CNG

Figure 3.23 Particulate Emissions - NYB Composite Test Cycle

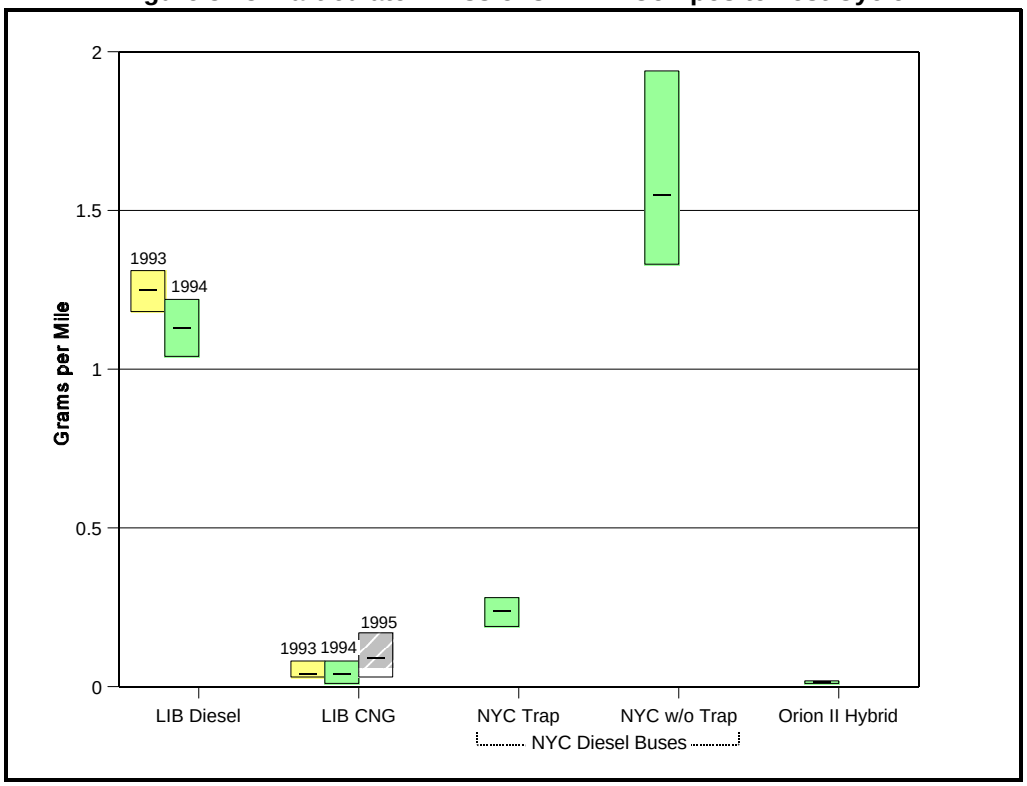

buses because the Orion's GM 4.3-liter engine operates at closed-loop stoichiometric air/fuel ratio and engine NO_x emissions are controlled through use of a three-way catalyst and exhaust gas recirculation (EGR).

Figure 3.23 illustrates the differences in particulates among these buses. The CNG buses show over 90% reduction in average particulate emissions compared to the baseline diesel buses. Natural gas engines inherently tend to produce very small quantities of particulate emissions. From 1993 to 1995, the CNG bus average particulate level doubled. The small amount of particulates produced when using natural gas are from lubricating oil consumed in the engine. Figure 3.23 also illustrates a particulate trap efficiency of around 80%, characteristic of relatively new traps. As would be expected for a spark-ignited engine using natural gas, the Orion II Hybrid bus had very low average particulate emissions.

The HC emissions over the NYB Composite driving cycle from 1993 to 1995 for the CNG buses relative to the diesel control buses and the Orion II Hybrid bus indicate slightly increasing and higher overall average HC emissions and slightly increasing and significantly lower overall average NMHC emissions. The CO emissions from 1993 to 1995 of the CNG buses relative to the diesel control buses and the Orion II Hybrid bus indicate a highly variable increasing trend. However, when the very high CO emissions from three of the ten CNG buses tested in 1994 are omitted, then the trend for CO emissions is slightly increasing from 1993 to 1995, and

significantly lower in overall average CO emissions than the Orion II Hybrid bus. The NO_x emissions of the CNG buses relative to the diesel control buses indicate increasing and lower overall average NO_x emissions. The NO_x emissions of the CNG buses relative to the Orion II Hybrid bus indicate increasing and higher overall average NO_x emissions.

Comparison to Clean Diesel Technologies

The previously presented bus emission results are from a version of the Cummins L10-240G engine that has since been subject to various improvements, including a new digital governor and improved fuel and ignition system packaging. Cummins currently has three six-cylinder inline heavy-duty natural gas engines: the 5.9-liter B5.9G, the 8.3-liter C8.3G, and the 10-liter L10. The B5.9G is rated at 195 horsepower and the C8.3G is rated at 250 horsepower, while the L10 natural gas engine is offered in three versions: the L10-240G, the L10-260G, and the L10-300G. The L10-300G is advertised at 300 horsepower. As Table 3.17 illustrates, the Cummins L10-240G engine comfortably meets all the proposed EPA emissions regulations through 1996. Also, the 1996 Cummins L10-300G engine with a catalytic converter comfortably meets all the proposed EPA emission regulations through 1998. Cummins may also develop a natural gas version of their M11 (11-liter) six-cylinder inline engine as well. The C8.3G is suitable for transit bus service and includes an air mass flow sensor, an integrated fuel system housing, full authority controls, and ignition coils mounted on the spark plugs, which eliminates spark plug wires. This engine is expected to meet EPA emission regulations without the use of a catalytic converter.

Cummins is promoting both its M11 and C8.3 diesel engines for transit applications. Both use catalysts to control particulates, which in turn requires that these engines use low-sulfur diesel fuel. Both engines have NO_x emissions slightly more than 4.5 gm/bhp•hr and particulates around 0.06 gm/bhp•hr. Cummins was planning to offer a diesel version of the L10 using a particulate trap, but since Donaldson has decided not to produce traps, Cummins is no longer offering this engine configuration.

Detroit Diesel Corporation (DDC) is offering several transit bus engines including diesel and natural gas versions of their Series 50 engine and a diesel version of their Series 40 engine. DDC was also planning to offer a version of the 6V-92TA engine with a particulate trap, but this configuration will probably not be offered given Donaldson's negative production decision. The DDC diesel engines used catalytic converters to meet the transit bus particulate standard in 1994, thus requiring them to use low-sulfur diesel fuel. The 1996 DDC Series 50G (natural gas) engine without a catalytic converter met all the proposed EPA emission

Table 3.17 EPA Heavy Duty Urban Bus Engine Emission Standards and Engine Certification Results (gm/bhp•hr)

Emission Standard/Engine Model	HC	CO	NO_x	PM
1993 Heavy-Duty Urban Bus	1.3	15.5	5.0	0.1
1994 Heavy-Duty Urban Bus	1.3	15.5	5.0	0.07
1996 Heavy-Duty Urban Bus	1.3	15.5	5.0	0.05
1998 Heavy-Duty Urban Bus	1.3	15.5	4.0	0.05
Pre-1994 Cummins L10-240G[6]	0.6[1]	0.4	4.0[2] 2.0[3]	0.02
1994 Cummins L10G[6]	0.6[1]	0.4	4.0[4] 2.5[5]	0.02
1996 Cummins L10-300G (300 HP) 1996 Cummins L10-300G[6]	1.1[1] 0.5[1]	11.2 5.3	3.5 2.4	0.06 0.03
1994 Cummins C8.3 Diesel (275 HP)[6] 1994 Cummins C8.3 Diesel (250 HP)[6]	0.16 0.2	0.8 0.5	4.7 4.9	0.05 0.06
1994 Cummins M11 Diesel (280 HP)	0.2	0.8	4.6	0.07
1994 DDC Series 50 Diesel (275 HP)[6]	0.0	1.0	4.8	0.05
1996 DDC Series 50G (275 HP)	0.7[1]	2.4	2.7	0.05
1993 DDC 6V-92TA Pilot Ignition Natural Gas (253 and 277 HP)	1.0[1]	0.3	4.7	0.07
1993 DDC 6V-92TA M100[6]	0.1[1]	2.1	1.7	0.03

[1] Non-methane hydrocarbons.
[2] EPA 49-State rating.
[3] CARB rating.
[4] 260 HP rating.
[5] 240 HP rating.
[6] With catalytic converter.

regulations through 1996, while the 1996 Cummins L10-300G engine required a catalytic converter to meet EPA emission regulations through 1996. The 6V-92TA engine using M100 had the lowest NO_x emissions of all the available transit bus engines and very low particulate emissions.

Comparison of the available and planned transit bus engines and their technology suggests some broad-based observations. First, engines using diesel fuel will need some sort of exhaust aftertreatment to keep particulate emissions in check while NO_x emissions are controlled through combustion chamber and injection system design. Low-sulfur diesel fuel allows the use of catalytic converters, which are less expensive (and probably more durable) than particulate traps. It should be pointed out that the catalytic converters simply oxidize the soluble organic fraction of particulate emissions; i.e., hydrocarbons adsorbed on carbon particulates formed from combustion. It is almost certain that whenever diesel fuel is combusted in a diesel engine, particulate

emissions will be formed. However, particulate emissions in natural gas or methanol diesel engines are caused primarily by consumption of engine lubricating oil.

Natural gas and methanol diesel engines can both achieve low NO_x emissions, but for different reasons. Natural gas engines can be operated lean while methanol engines have inherently low NO_x because of methanol's high latent heat of vaporization. It will be very difficult for diesel engines using even low-sulfur or clean diesel fuel to meet the same low NO_x emissions as natural gas or methanol engines. This difference can have an economic advantage in the future through the creation of emissions credits for the vehicle owner.

Generation, trading, and selling of emissions credits originated through regulation of stationary sources is spreading to mobile sources. In some places, trading between stationary and mobile sources may be allowed. The value of the credits will depend on the local quality of the air. Credits will be worth more in areas of poor air quality. As an example, in California, removing NO_x emissions is valued at around $10,000 per ton. A transit bus in California with an engine having NO_x emissions of 2.5 gm/bhp•hr is estimated to be able to generate about $6,000 per year in NO_x emissions credits if it is driven 50,000 miles per year.[20] This revenue could offset additional costs of alternative fuel buses, or even make them less expensive to own and operate than diesel buses. It is possible that a similar program may be established in New York State.

Greenhouse Gases

If heavy-duty natural gas vehicles have similar fuel efficiency to diesel heavy-duty vehicles, they should have 10% to 15% less overall greenhouse gas impact (resource through end-use) than diesel heavy-duty vehicles. However, in the AFV-FDP, the natural gas transit buses tested had fuel consumption between 14% and 30% higher than similar diesel buses. When the increase in fuel consumption is taken into account, the overall greenhouse gas impact is estimated to be between a 3% reduction and a 17% increase. Newer heavy-duty natural gas engines may consume less fuel, and the overall greenhouse gas impact should decrease proportionately.

[20] "Mobile Emission Reduction Credits" presented by Kenneth D. Smith, Clean Fuels Program Policy Director, Sacramento Metropolitan Air Quality Management District, at the SAE LNG TOPTEC, Austin Texas, January 20, 1994.

Safety

Though natural gas is odorized, on a heavy-duty CNG vehicle most of the high-pressure lines, valves, and fittings may be located in parts of the vehicle where small leaks may go undetected. For this reason, preventative maintenance should include a thorough check of the natural gas system using a methane detector. In CNG transit buses the components to be checked are usually located high on the bus, thus this portion of preventative maintenance represents a safety hazard in addition to the time required to complete it. Special lifts may need to be purchased to provide a safe means of accessing all the high-pressure components on the roof of the bus. Aside from several unintended fuel releases which did not result in injuries or property damage, no known safety- or health-related incidents have resulted from refueling, maintenance, or servicing of the CNG transit buses during the AFV-FDP.

The cylinders used on these CNG buses are DOT-exempt because they were manufactured under a Research and Special Programs Administration (RSPA) exemption, DOT-E 8814, and as long as the cylinders are mounted on the buses and used as fuel tanks, there is no legal requirement to reinspect or retest them under the exemption. Also, cylinders used as fuel tanks for propulsion and not to transport cargo are not subject to regulation under the Federal hazardous materials transportation law (49 U.S.C. 5101 et seq.) or the Hazardous Materials Regulations (49 CFR Parts 171-180). Therefore, each transit property should make their own determination about what reinspections and retests are necessary based on their own safety requirements or considerations. Incidents have occurred where CNG tanks have developed leaks, and tank ruptures have occurred on vehicles outside New York State. In such cases, the vehicle owners need to work closely with the tank manufacturer and vehicle manufacturer to perform any special inspections as needed to verify the safety of all the vehicles that have the same style tanks installed.

Refueling Infrastructure

The heavy-duty vehicles (primarily transit buses) using natural gas to date in New York State all use CNG. In the future it is possible that some heavy-duty vehicles will use LNG, especially for over-the-road trucks. New York State has maintained a long-standing legal moratorium on construction of new LNG facilities, but there are a few existing LNG facilities in New York State. The facilities are operated by gas utilities as bulk storage plants and they are not presently used to refuel vehicles. Various parties have expressed interest in building LNG vehicle refueling facilities in New York State if the LNG moratorium is allowed to expire. Using LNG in New York City will remain problematic due to the stringent fire safety rules there.

Transit bus fleets have the most experience with CNG refueling facilities in New York State, but none of them to date have built facilities to serve an entire fleet. To address the costs of refueling heavy-duty CNG vehicles, a study was performed of a “model” transit bus fleet. The size of the model fleet was 200 buses, each using 40

gallons of diesel fuel per day, and was based on information obtained from conversations with various transit bus fleet operators in New York State.[21] Vehicle and fuel usage profiles were estimated so that equipment needs and station costs could be determined.

Natural gas buses carry several cylinders that store fuel at high pressures (3000 psi for the buses currently used in the State). During refueling, gas under pressure is transferred to the vehicle, raising the fuel storage pressure to its designed operating value (3,000 psi). At typical transit bus facilities, refueling is not an isolated operation. The refueling operation is usually, but not always, combined with bus cleaning, fare removal, and/or drivetrain fluid checks. The exact sequence of refueling operations (and the nature of those operations) varies among transit properties. A specific shift or work crew is usually dedicated to refueling buses. For facility design purposes it was assumed that operations at a CNG refueling facility would have to be similar to those at current diesel refueling facilities.

For practical purposes, station designs were limited to those that could cycle each vehicle through the refueling island in less than six minutes. Few CNG stations have the capacity to fuel 200 transit buses with 40-diesel-gallon-equivalents of CNG, if each bus is fueled in less than six minutes and all the buses are fueled in the span of a few hours. However, most equipment needed for such a station is commercially available. Four hypothetical facility designs (three CNG and one LNG) were compared to a new conventional diesel refueling facility:

- CNG with electric-motor-driven natural gas compressors
- CNG with natural-gas-engine-driven natural gas compressors
- LNG-to-CNG storage/pump/vaporizer system
- LNG-only refueling facility.

Each refueling station design has unique operating and capital cost characteristics.

Refueling Station Designs

Compressor-Based Refueling Stations. Compressor-based refueling stations consist of multi-stage gas compressors (with either electric or engine drives), automatic fill valve systems, storage cascade (or buffer), related piping, and dispenser(s) as shown in Figure 3.24. In smaller CNG stations, high-pressure

[21] Moog, C.G., "Life Cycle Economic Comparison of Diesel and Compressed Natural Gas Transit Bus Refueling Facilities," prepared for the New York State Energy Research and Development Authority by EA Engineering, January 1992.

Figure 3.24 Schematic of Compressor Based Refueling Station For 200 Transit Bus Fleet

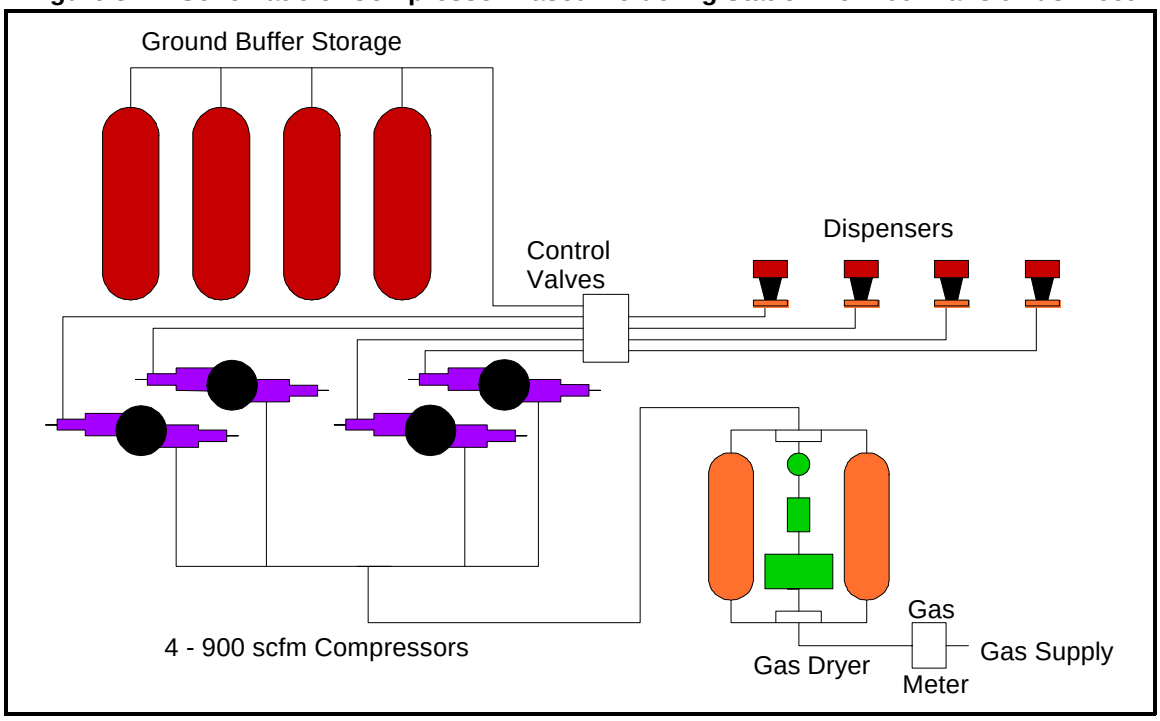

storage cylinders are used to decrease required compressor capacity. These cylinders are usually connected in three banks of cylinders called cascades. For larger stations, the incremental cost of compressor capacity is less than the incremental cost of additional storage cylinders. The storage cylinders are still used in larger stations to prevent excess compressor cycling and are usually connected as a single bank or buffer.

A design cycle time of six minutes per vehicle (four to five minutes to fill, one to two minutes to reposition vehicles) will allow each dispenser to refuel 10 vehicles per hour. To complete refueling of 200 buses in a single shift, three dispensers will be required. In addition, to allow for dispenser repairs and maintenance, a spare dispenser was assumed to be installed. Since metering capability on CNG dispensers is an expense that can increase maintenance and restrict fuel flow, only one of the four dispensers was assumed to include a meter. The one metered dispenser could be used to compare individual fuel economy against fleet-wide aggregates. Fleet aggregates would be determined by the total volume of gas compressed as measured at the inlet to the gas dryer.

Refueling at this rate requires 2,700 scfm in compressor capacity. This capacity can be supplied by either four 675-scfm (each with a 150-hp drive motor when 300 psi is available at the inlet or 250-hp with a 60-psi inlet) or three 900-scfm (each with a 200-hp drive motor when 300 psi is available at the inlet or 325 hp for a 60-psi inlet) compressors. In either case an extra compressor was assumed to be installed to allow for compressor

repairs and maintenance without decreasing refueling capacity. To limit compressor cycling, six high-pressure tanks built according to ASME specifications (each with approximately 10,000-scf storage capacity) were assumed to be installed. These tanks are capable of storing approximately four minutes of compressor capacity (if 2,700 scfm of compression capacity is available and no vehicle is refueling) when cycled between 3,000 and 4,000 psi. To further prevent cycling, refueling procedures should be developed to minimize the time when fuel is not being dispensed.

Two different compressor drive systems were considered, electric motors and natural-gas-powered internal combustion engines. Electric motors require little maintenance and provide a long service life. They can be expensive to operate (especially during hours when demand charges are in effect). The natural gas engine drives can be less expensive to operate but do require periodic maintenance. In addition to periodic maintenance (oil, filters, etc.) the natural gas engine drives will require periodic rebuilding.

LNG-to-CNG Refueling Station. Pressurizing liquids requires less energy than compressing gases and, in many instances, can be accomplished more simply. Station designs that pressurize LNG and then vaporize the high-pressure liquid can be a practical alternative to large compressor-based systems for vehicle refueling. While liquefying natural gas can be done on site, costs and operational complexity of LNG plants of this size would equal or exceed those of a compressor-based stations. Since LNG is available from a variety of sources (local peak shaving plants, import terminals, etc.) there is no reason for a transit bus operator to construct a liquefaction plant.

Using offsite-sourced LNG, a pump/vaporizer refueling station would have lower installed costs and be somewhat simpler mechanically than a compressor-based station. Energy requirements would be greatly reduced. The station would consist of several large LNG storage vessels, cryogenic pumps, vaporizers, an odorizer, and dispensers.

Once a day, tanker truck(s) would deliver LNG (as they currently deliver diesel fuel) to the station. In most areas, a single tanker truck can deliver 11,000 gallons of LNG (the equivalent of 6,000 to 7,000 gallons of diesel fuel). A typical bus garage (using 8,000 gallons of diesel fuel or 13,000 to 14,000 gallons of LNG per day) would require two tanker loads of fuel per day (or to lower delivery costs a single truck one day with two deliveries the following day). To provide continuous station operation and to limit initial costs, station storage should be sufficient for one and one-half to two days of operation. This would require between 21,000 and 28,000 gallons of onsite LNG storage. LNG is stored in low pressure double-walled stainless steel vessels. The highly insulated storage and high heat of vaporization of LNG limits the rate of gas boil-off. The storage

tanks have pressure relief devices to release boiled-off fuel to prevent over-pressurization. Under normal operations (removing fuel from the vessel every day) there should be few if any boil-off releases.

One standard LNG pump/vaporizer system uses a 12-gpm LNG pump. Pumping at this rate will require slightly longer refueling times than the planned six minute cycle time. Fuel transfer would be accomplished in six minutes, for a seven-minute cycle time. To refuel 200 buses in a single shift the station will require three CNG dispensers (total time 7 hours 45 minutes). If this requires more than a single shift, a larger LNG pump can be supplied. Since refueling will be taking place using the same number of lanes with approximately the same cycle times, it was assumed that refueling labor cost would be the same for the LNG-to-CNG refueling stations as for the compressor-based stations.

The drive motors for the LNG pumps would be approximately 20 hp. To help limit cycling a small high-pressure storage bottle is located downstream of the vaporizer. If a separate vaporizer is used for each dispenser, the vaporizers would each be required to provide an average of 9,300 Btu/min of heat (when the pump is operating at 12 gpm) to the pressurized LNG to vaporize it. This heat is provided by a gas-fired boiler system that burns natural gas drawn from the vapor space of the LNG storage tanks. To operate three dispensers, the boiler will need to provide 1,400,000 Btu/hr. The schematic in Figure 3.25 shows a station suitable for the typical 200-bus fleet. Included is an extra pump/vaporizer/dispenser allowing for station repairs.

Figure 3.25 Schematic of Typical LNG-to-CNG Transit Bus Refueling Station

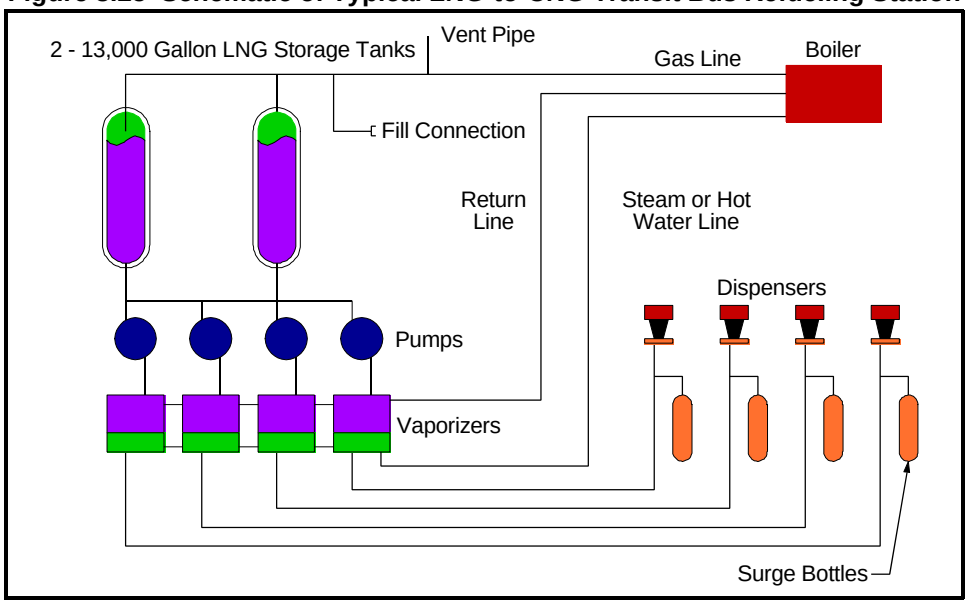

The LNG storage tanks can be mounted upright on a concrete pad. If space is at a premium it is possible to mount the tanks in an underground vault. This arrangement, of course, increases the cost of the station. Station designs were assumed to use aboveground storage tanks.

At this time, the Fire Department of the City of New York does not allow the transportation of LNG within the city. This restriction eliminates this type of station from use in the City. The design could potentially be used elsewhere in New York State if the current moratorium on LNG facility construction were allowed to expire.

LNG Refueling Station. Although no transit operators in New York State are currently using LNG as a vehicle fuel, several operators in other regions of the country are using LNG as a transit bus fuel. In addition, several over-the-road trucking firms are operating LNG fueled vehicles.

An LNG refueling facility would operate in a manner similar to existing diesel refueling facilities. LNG would be delivered to the facility via tanker truck. The LNG would be stored in the same manner as that envisioned for the LNG-to-CNG refueling facility; i.e., low pressure double-walled stainless steel vessels with sufficient capacity (26,000 gallons) to supply the fleet for one and one-half to two days of operation. Figure 3.26 shows a schematic of an LNG refueling station suitable for a 200-bus fleet. The LNG would be transferred to the LNG buses using high flow (24 gpm) low pressure (less than 100 psi) pumps. Since liquid is being transferred it is

Figure 3.26 Schematic of a Typical LNG Transit Bus Refueling Station

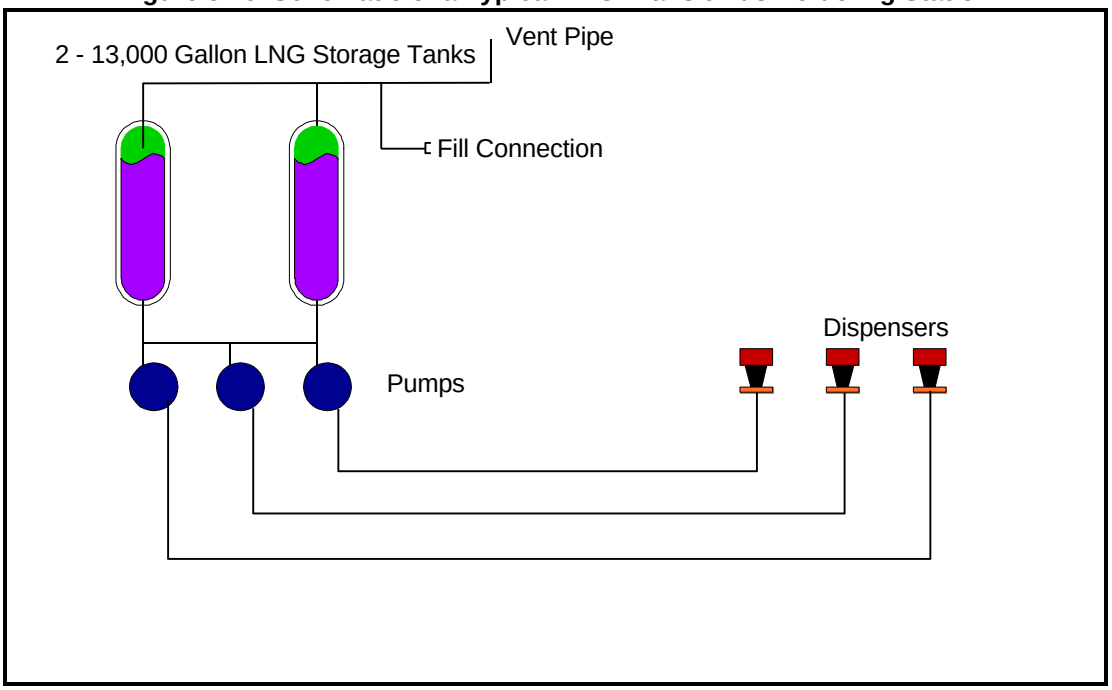

easier to obtain the high flow rates needed to meet the six-minute turn-around time. Three refueling islands, similar to diesel refueling islands, would be needed to supply the fleet.

Conventional Diesel Refueling Facility. The costs of the different alternative refueling facilities can be compared to a baseline diesel refueling facility, which uses two 10,000-gallon underground storage tanks and three dispensing systems to supply the fleet of 200 buses. Once a day approximately 8,000 gallons of diesel fuel would be delivered via truck tanker.

Cost Estimates. Estimates for both the capital and operating costs for each of the various hypothetical stations were made. These estimates include equipment costs provided by several manufacturers (mostly station assemblers). Operating cost include the raw fuel costs, station-related energy costs (electricity or natural gas used to compress CNG or pressurize and vaporize LNG), and station maintenance costs.

Capital Cost Estimates. Estimates of compressor costs were obtained from several compressor packaging firms. Likewise, prices for other components and accessories were obtained. Costs of equipment installation were estimated. Currently there are a very limited number of suppliers providing packaged LNG-to-CNG stations. The equipment used in these stations is fairly common: conventional gas-fired boilers, high-pressure heat exchangers, cryogenic pumps, etc. If this type of station becomes popular, the availability and cost of prepackaged stations should decrease. The only supplier providing quotes for the LNG-to-CNG station equipment prepackages the design so that each dispenser has a separate pump vaporizer and boiler. Designs utilizing common boilers, pumps, and/or vaporizers should lower equipment and installation costs.

Installed station costs are summarized in Table 3.18. The cost of installation was estimated based on an assumed site design. The generic site plan used to develop installation cost estimates is shown in Figure 3.27. The station layout shown is for a CNG refueling station. An LNG-to-CNG or an LNG station would use a similar layout, with the cryogenic tanks installed in place of the storage cascade, and pumps mounted nearby.

To compare station life-cycle costs, the capital costs were converted into a monthly carrying cost. This cost assumed that the station was financed using 20-year (estimated station life) tax-free securities with a 5% interest rate.

Table 3.18 Estimated Refueling Station Equipment and Installation Costs

Station Type	Cost ($)
CNG with Electric-Motor-Driven Compressor Station	$2,700,000
CNG with Natural-Gas-Engine-Driven Compressor Station	$3,100,000
LNG-to-CNG Pump/Vaporizer Station	$1,800,000
LNG Station	$950,000
Conventional Diesel Station	$350,000

Figure 3.27 Typical CNG Bus Refueling Station (LNG and LNG-to-CNG are Similar)

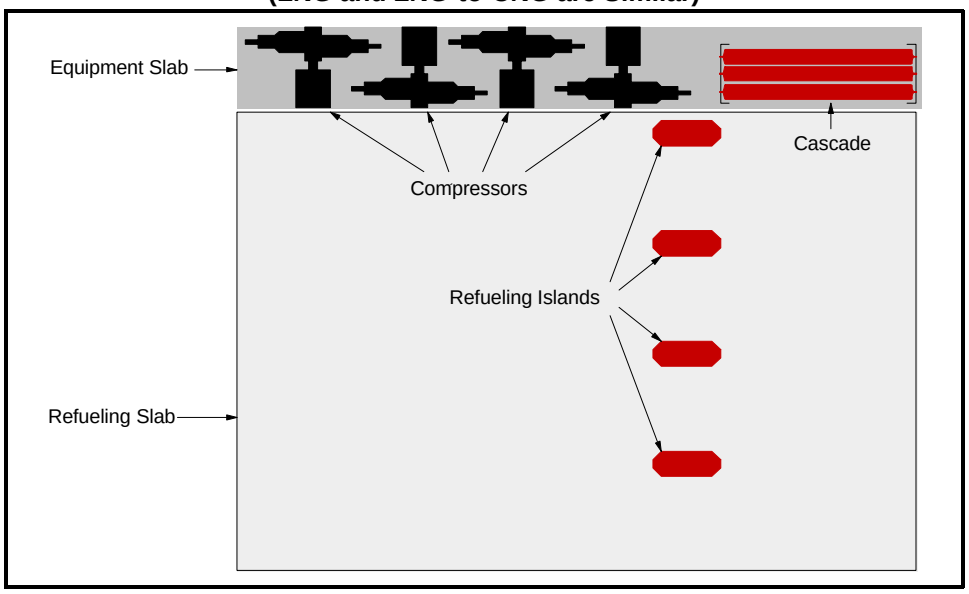

Operational Cost Estimates. The major operational cost components for each of the stations are natural gas (supplied either in gaseous form from the local distribution company or as a liquid from a liquefaction plant), electrical power, station maintenance, and station-related labor. Since refueling labor was assumed to be equal for the three stations considered, refueling labor costs were not estimated.

The costs of natural gas (gaseous) and electricity were supplied by local utility companies. It was assumed that all refueling occurred during off-peak hours (usually after 10 pm and before 6 am) and

that 300-psi gas was available at the compressor inlet (lower pressure will increase the capital cost of compressors and the amount of energy needed to compress the gas to 3,000 psi). The cost of LNG was estimated based on estimates provided by suppliers able to provide truckload deliveries of LNG. Maintenance costs were estimated based on a repair-parts cost and other information supplied by equipment manufacturers. The operational costs calculated are presented on a monthly and on a per equivalent gallon (diesel) basis in Table 3.19.

The cost of natural gas (both liquefied and gaseous) and electricity varies from site to site. The values used in Table 3.19 are the average costs provided for the areas of New York State where CNG buses are currently operating. Since electrical costs account for no more than 5% of delivered fuel cost, variations in its cost will not cause large changes in fuel cost. The price of natural gas accounts for up to 88% of the cost of delivered fuel at CNG stations. The cost of supplying natural gas to the compressor based stations ranged from a low of $0.39/therm to a high of $0.68/ therm. Likewise the estimated cost of purchasing LNG ranged from $0.40 to $0.65 per gallon of LNG. Diesel fuel has

Table 3.19 Monthly and per Diesel Gallon Equivalent Fuel Prices (No Taxes)

Station Type		Fuel[1]	Electricity	Maintenance	Capital Charge[3]	Total[2]
CNG with Electric-Motor-Driven Compressor Station	$/month	88,000	4,700	10,800	17,800	120,000
	$/gallon	0.53	0.03	0.06	0.11	0.72
CNG with NG-Engine-Driven Compressor Station	$/month	93,000	0	13,000	20,500	126,000
	$/gallon	0.55	0	0.08	0.12	0.75
LNG-to-CNG Pump/Vaporizer Station	$/month	140,000	300 to 400	6,000	11,900	158,000
	$/gallon	0.83	0.001	0.04	0.07	0.94
LNG Station	$/month	138,000	<20	2,500	6,300	147,000
	$/gallon	0.82	0.00	0.015	0.037	0.876
Diesel Station	$/month	118,000	<20	172	2,300	120,000
	$/gallon	0.70	0.00	0.001	0.014	0.72

[1] Fuel is the cost of delivered natural gas, LNG, or diesel, depending on station.
[2] Totals may not equal sum of components because of rounding.
[3] Interest and principal repayment, levelized over 20 years, assuming financing via tax-free 5% bond.

also varied in price from $0.45 to $0.95 per gallon based on time of year and short-term surpluses or shortages. The effect these price variations on the delivered cost of fuel is shown in Table 3.20. These costs directly correspond to those in Table 3.19 except the high and low estimates of fuel cost are used.

Table 3.20 Impact of Fuel Cost Variations

Station Type		Low Fuel Cost	High Fuel Cost
Compressor Station CNG with Electric-Motor-Driven Compressor Station	Monthly	$ 112,000	$178,000
	per Gallon	$0.67	$1.06
CNG with NG-Engine-Driven Compressor Station	Monthly	$120,000	$184,000
	per Gallon	$0.71	$1.10
LNG-to-CNG Pump/Vaporizer Station	Monthly	$130,000	$200,000
	per Gallon	$0.77	$1.19
LNG Station	Monthly	$120,000	$189,000
	per Gallon	$0.71	$1.12
Diesel	Monthly	$ 78,000	$162,000
	per Gallon	$0.47	$0.97

Garage Safety Modifications. As with light-duty natural gas vehicles, a professional engineer should examine garage electrical and HVAC systems prior to introducing heavy-duty natural gas vehicles, and safety training should be provided to transit personnel. In the AFV-FDP, natural gas leaked from buses at transit garages on several occasions, but no injuries, fires, or property damage occurred, an outcome attributed in part to prior attention to training and facility design.

Transit bus garages have been optimized for handling diesel buses and often require modifications to safely and efficiently provide services to CNG buses. These modifications usually can be performed most cost-effectively if included as part of a new facility design or periodic facility refurbishment program, in which case the incremental cost of the CNG features can be very small. If the CNG modifications are done as an independent project, costs can be very high, potentially exceeding the cost of refueling equipment.

Other Demonstrations

CNG transit buses have been used in many parts of the U.S. and around the world. Following are two examples of long-running programs to convert transit fleets from diesel fuel to CNG.

Pierce Transit, Tacoma Washington. Pierce Transit is among the very first transit companies in the U.S. to use CNG as a fuel. Reasons given for adopting this fuel were that CNG was clean-burning, safe, plentiful, and domestic with more stable fuel costs compared to imported petroleum fuels.[22] In 1986, Pierce Transit converted two of their 1974 model diesel buses to dual-fuel operation on diesel fuel and natural gas. In 1988, they wanted to purchase dedicated natural gas buses, but none were available. As an interim step, they purchased 19 ElDorado 30-foot buses with Ford 460 spark ignition engines. These buses were configured to be bi-fuel CNG and gasoline with a range of approximately 240 miles on CNG and 260 miles on gasoline.

The initial experience with the ElDorados was not very positive. Problems included difficult cold starts, engine backfires strong enough to destroy air cleaner housings, hesitation upon acceleration, and generally unreliable operation. These problems were cured by substituting another CNG fuel system. The ElDorados remain in service today.

While the ElDorados worked, Pierce Transit really wanted and needed full size transit buses. In 1989, Bus Industries of America offered 40-foot Orion model buses with the Cummins L10G-240 engine, and Pierce Transit bought 15 of them. These very early model CNG buses had several problems: the transmissions overheated and wore out prematurely; poor spark plug wire and spark plug life; engine sensor problems; water infiltration of the throttle actuators; slow acceleration; and unreliable idle control by the governor. Many of these problems were worked out with the assistance of Cummins. These Orion buses cost $41,500 more than the same model Orion diesel buses.

In subsequent purchases of CNG buses, Pierce Transit optimized features of the CNG fuel system and added additional CNG storage capacity to increase bus operating range. These changes increased the incremental bus cost to $50,000 each over the same diesel bus. At present, Pierce Transit has 57 40-foot CNG transit buses in addition to the 19 CNG ElDorados. Pierce Transit likes their CNG transit buses very much, and they have received positive reactions from both the community and their own bus operators. Their long-range plan is to turn over the entire fleet to CNG buses as their diesel buses wear out.

---

[22] "Pierce Transit's Experience with an Alternative Fuel - Compressed Natural Gas (CNG), January 1992 - December 1993," April 1995, Pierce Transit, 3701 96th St SW, Tacoma, Washington 98499-0070.

The cost of natural gas to Pierce Transit before compression is in the range of 80% to 90% of the cost of diesel fuel. The local utility (Washington Natural Gas) upgraded the 5.4 miles of natural gas line leading to Pierce Transit from 2-inch diameter to 6- and 8-inch diameter, with a pressure of 25 psi. The cost of this upgrade was approximately $1 million and was paid for by the utility.

Pierce Transit installed a CNG refueling facility onsite that consists of two 450-cfm compressors and nine ASME pressure vessels. This allows the CNG buses to be refueled in fast-fill fashion each day. The cost of the refueling facility was $925,000.

Greater Cleveland Rapid Transit District. The Greater Cleveland Rapid Transit District has 101 CNG buses and 620 diesel buses. Their first CNG bus was purchased in 1990 and used the Cummins L10G-240 engine. This initial purchase was followed by 20 more Cummins powered CNG buses in 1991. In 1994, Cleveland purchased 80 more CNG buses using the DDC Series 50 engine. All of these buses are Flxible Metro models. The buses each have between 7,500 and 16,000 scf of natural gas storage.

Cleveland built a CNG refueling facility that consists of four 1,500-scfm compressors. This system is capable of delivering from 2,000 to 2,300 scfm to the buses. At this rate, each bus is refueled in six to eight minutes. However, this is still about twice as long as it takes to refuel comparable diesel buses. The CNG refueling facility cost about $2.5 million to complete.

The parking garage for the CNG buses is configured with methane detectors to sense CNG leaks and respond by first turning on a warning light indicating the presence of natural gas. If the leak continues, an alarm is sounded, ventilation fans are turned on, and the doors are opened to allow air into the garage. This system was proven to work when pressure relief valves failed and vented natural gas into the garage.

The operating problems Cleveland encountered included inadvertent release of CNG cylinder pressure relief valves, and variable natural gas composition that caused engine failures. The failure of the pressure relief valves does not appear to be a chronic problem, and the engine failures were averted by de-rating the engines. Some of the CNG buses have limited operating range and in the event they run out of fuel, they must be towed in since it is not possible to bring enough CNG out to the bus. This has proven to be an inconvenience not experienced with diesel buses. Cleveland found that the CNG buses presented a steep learning curve for their staff, but many problems have now been resolved.

Cleveland has found their CNG buses to be cleaner and quieter than the comparable diesel buses. Their current plan is to switch all of their diesel buses over to CNG buses.[23]

Lessons Learned

- Heavy-duty natural gas engines have 14% to 30% higher fuel consumption than their diesel counterparts. However, this increase in fuel consumption is typically offset by the lower price of natural gas.
- CNG fuel systems take up from three to five times the volume of diesel fuel systems, and CNG tanks capable of storing the equivalent of 100 gallons of diesel fuel weigh up to 3,000 pounds.
- Heavy-duty natural gas engines are available in a wide range of sizes and power outputs.
- LNG is preferred for vehicles where long operating range is a highly desired characteristic.
- Pressure relief valves have been a major source of unreliability and maintenance cost for CNG transit buses and need to be improved.
- Using natural gas can greatly lower transit bus particulate emissions and can result in significantly lower NO_x emissions.
- CNG refueling facilities for heavy-duty vehicles cost six to eight times the cost of typical new diesel fuel refueling facilities.

[23] Phone conversation with Mr. Art Lyons, Greater Cleveland Rapid Transit District, April 12, 1996.